4257-1848 A

Uninterruptible Power Systems

50~120kVA

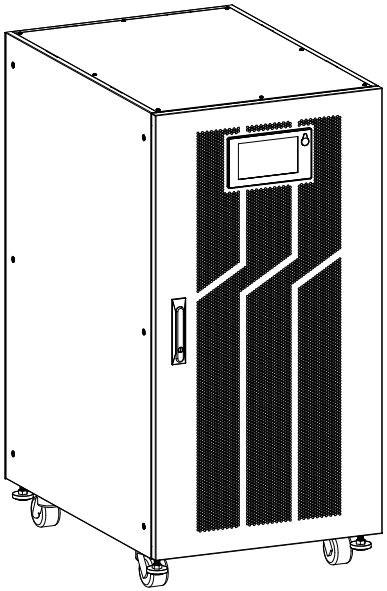

Operation Manual

All rights reserved.

The information in this document is subject to change without notice.

Publish statement

Thank you for purchasing this series UPS.

This series UPS is an intelligent, three phase in Three phase out, high frequency online UPS designed by our R&D team who is with years of designing experiences on UPS. With excellent electrical performance, perfect intelligent monitoring and network functions, smart appearance, complying with EMC and safety standards, The UPS meets the world's advanced level.

Read this manual carefully before installation

This manual provides technical support to the operator of the equipment.

Contents

1．Safety 2
1.1 Safety notes 2
1.2 Symbols used in this guide 3
2．Main Features 3
2.1 Summarization 3
2.2 Functions and Features 3
3．Installation 4
3.1 Cabinet Outlook 4
3.2 LCD control panel 7
3.3 Installation notes 8
3.4 External Protective Devices 9
3.5 Power Cables 9
3.6 Power cable connect 11
3.7 Battery connection 13
3.8 UPS parallel Installation 18
3.9 LBS installation 20
3.10 Computer access 21
4．Operation 23
4.1 Operation Modes 23
4.2 Turn on/off UPS 25
4.3 The LCD Display 30
4.4 Display Messages/Troubleshooting 56
4.5 Options 60
Appendix 1 Specifications 62
Appendix 2 Problems and Solution 64
Appendix 3 USB communication port definition 65
Appendix 4 RS232 communication port definition 66
Appendix 5 RS485 communication port definition 67
Appendix 6 Optional port definition 68
Appendix 7 REPO instruction 69
Appendix 8 Backfeed Protection 70

1 . Safety

Important safety instructions - Save these instructions

There exists dangerous voltage and high temperature inside the UPS. During the installation, operation and maintenance, please abide the local safety instructions and relative laws, otherwise it will result in personnel injury or equipment damage. Safety instructions in this manual act as a supplementary for the local safety instructions. Our company will not assume the liability that caused by disobeying safety instructions.

Contact the nearest hazardous waste disposal station when the products or components are discarded.

1.1 Safety notes

1. Even no connection with utility power, 220/230/240VAC voltage may still exist at UPS terminal!
2. For the sake of human being safety, please well earth the UPS before starting it.
3. Don't open or damage battery, for the liquid spilled from the battery is strongly poisonous and do harmful to body!
4. Please avoid short circuit between anode and cathode of battery, otherwise, it will cause spark or fire!
5. Don't disassemble the UPS cover, or there may be an electric shock!
6. Check if there exists high voltage before touching the battery
7. Working environment and storage way will affect the lifetime and reliability of the UPS. Avoid the UPS from working under following environment for long time
   - Area where the humidity and temperature is out of the specified range(temperature 0 to 40℃, relative humidity 5%-95%)
   - Direct sunlight or location nearby heat
   - Vibration Area with possibility to get the UPS crashed.
   - Area with erosive gas, flammable gas, excessive dust, etc
8. Keep ventilations in good conditions otherwise the components inside the UPS will be over-heated which may affect the life of the UPS.
9. Affix a label bearing the following words on all external switches of the UPS Unit power supply：

BEFORE WORKING ON THIS CIRCUIT

-ISOLATE UNINTERRUPTIBLE POWER SYSTEM (UPS)

-THEN CHECK FOR HAZARDOUS VOLTAGE BETWEEN ALL TERMINALS INCLUDING THE PROTECTIVE EARTH

RISK OF VOLTAGE BACKFEED

10. **Do not connect the UPS output to regenerative load systems including photovoltaic system and speed drives. Failure to follow instruction can result in equipment damage!**

1.2 Symbols used in this guide

WARNING!

Risk of electric shock

CAUTION!

Read this information to avoid equipment damage

2 . Main Features

2.1 Summarization

This series UPS is a kind of three-in-three-out high frequency online UPS.

The UPS can solve most of the power supply problems, such as blackout, over-voltage, under-voltage, voltage sudden drop, oscillating of decreasing extent, high voltage pulse, voltage fluctuation, surge, inrush current, harmonic distortion (THD), noise interference, frequency fluctuation, etc..

This UPS can be applied to different applications from computer device, automatic equipment, communication system to industry equipment.

2.2 Functions and Features

◆Integrated solution for data center

UPS can be integrated with battery cabinet, PDU external maintenance bypass, offering excellent choice for data center.

◆3Phase In/3Phase Out UPS

It is 3Phase In/3Phase Out high-density UPS system, of which input current is kept in balance. No unbalance problem might occur.

◆Digital Control

This series UPS is controlled by Digital Signal Processor (DSP); enhance, it increases reliability, performance, self-protection, and self-diagnostics and so on.

◆Battery Configurable

Build-in battery: 50-80kVA can build-in 120pcs 7or 9Ah batteries, 100-120kVA can build-in 200pcs 7or 9Ah batteries.

External battery: From 30 blocks to 50 blocks, the battery voltage of this series UPS can be configured at 30 blocks, 32 blocks, 34 blocks, 36 blocks, 38 blocks, 40 blocks, 42 blocks, 44 blocks, 46 blocks, 48 blocks or 50 blocks according to your convenience.

◆Charging Current is configurable

Via setting tool, the user may set the capacity of the batteries as well as reasonable charging current as well as maximum charging current. Constant voltage mode, constant current mode or floating mode can be switched automatically and smoothly.

◆Intelligent Charging Method

The series UPS adopts advanced three-stage charging method—

1st stage: high current constant current charging

to guarantee to charge back to 90%;

2nd-stage: Constant Voltage

In order to vitalize battery and make sure batteries are fully charged

3rd stage: floating mode.

With this 3-stage charging method, it extends the life of the batteries and guarantees fast charging.

◆LCD Display

With LCD plus LED displays, the user may easily get UPS status and its operational parameters, such as input/output voltage, frequency & load%, battery % and ambient temperature, etc...

◆Intelligent Monitoring Function

Via optional SNMP Card, you may remotely control and monitor the UPS.

◆EPO Function

The series UPS may be completely shut off when the EPO is pressed. REPO function (Remote EPO) is also available in this series UPS.

3 . Installation

3.1 Cabinet Outlook

50kVA&60kVA&80kVA

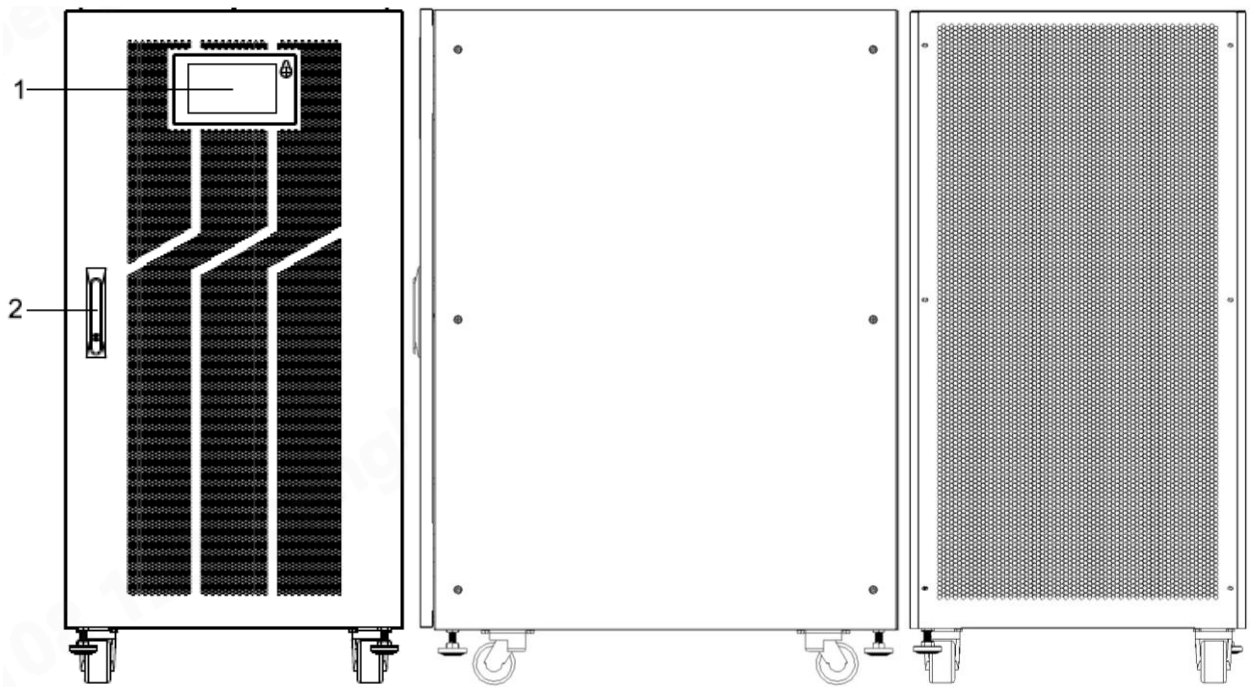

Front View **Side View** **Rear View**

50kVA&60kVA

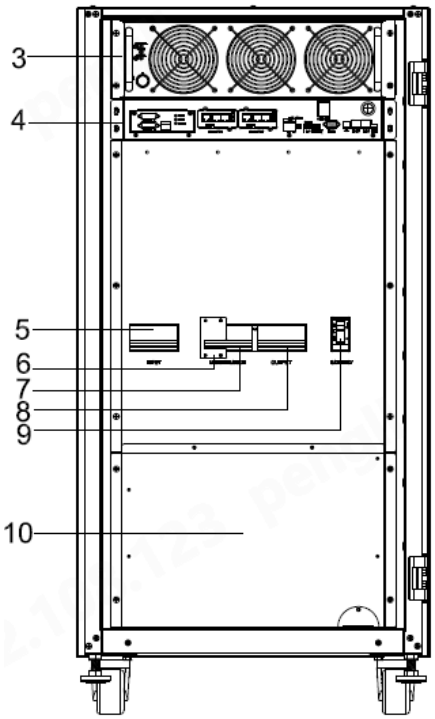

Front View (open door)

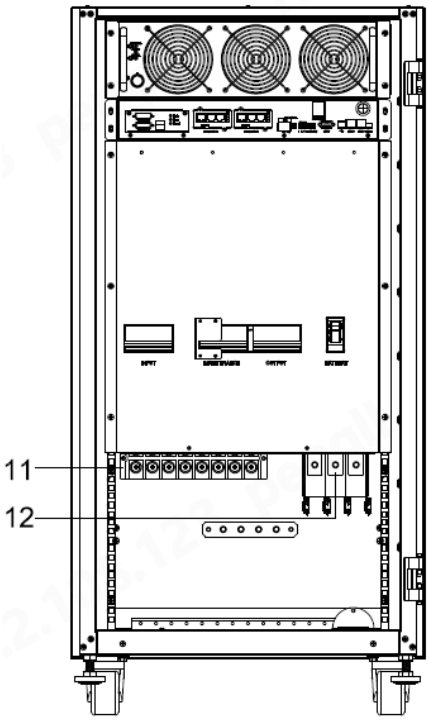

Front View (open cover)

80kVA

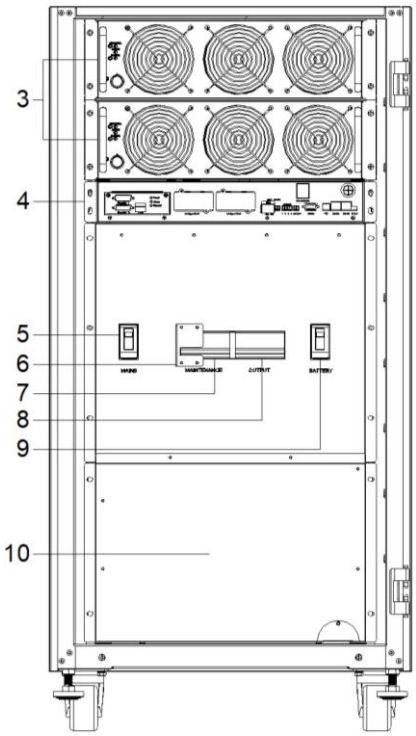

Front View (open door)

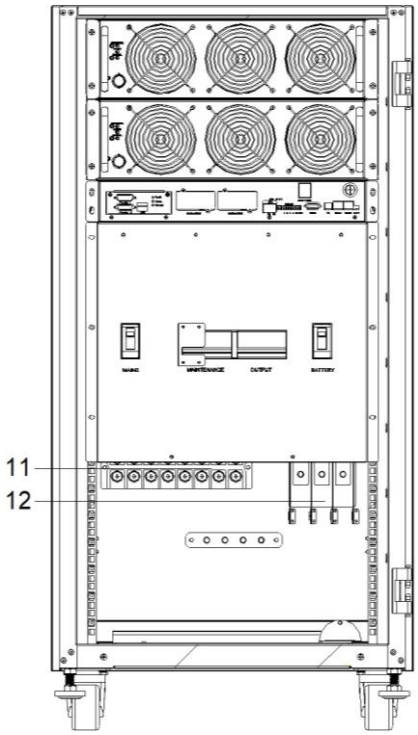

Front View (open cover)

100kVA&120kVA

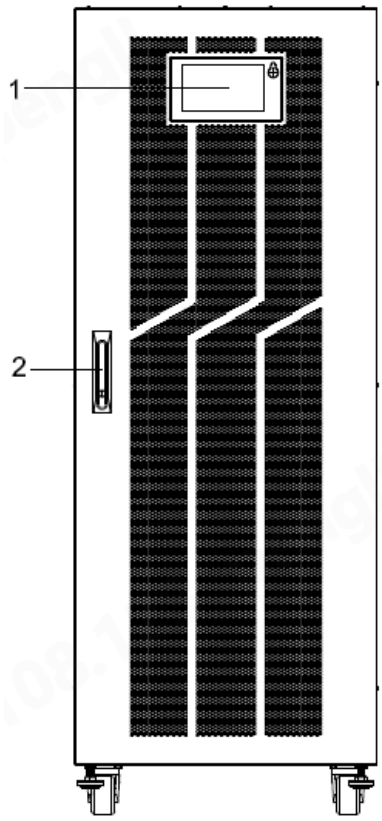

Front View

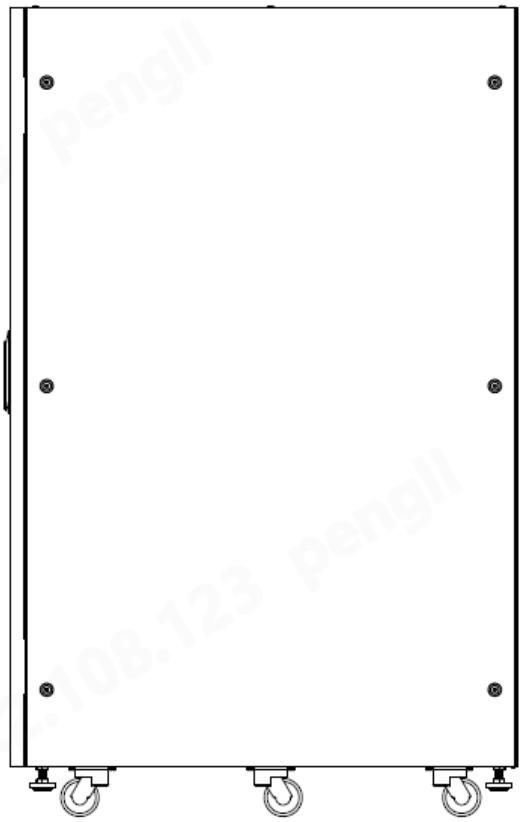

Side View

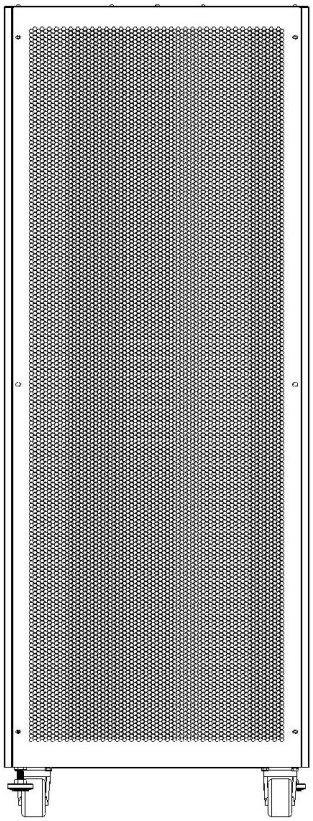

Rear View

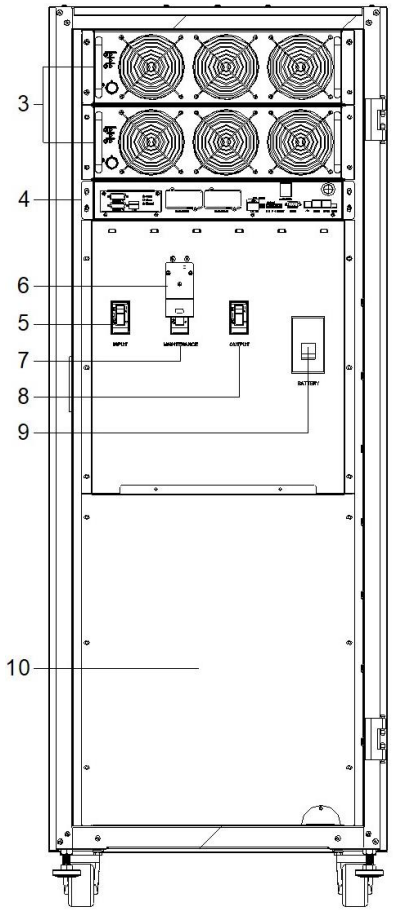

Front View (open door)

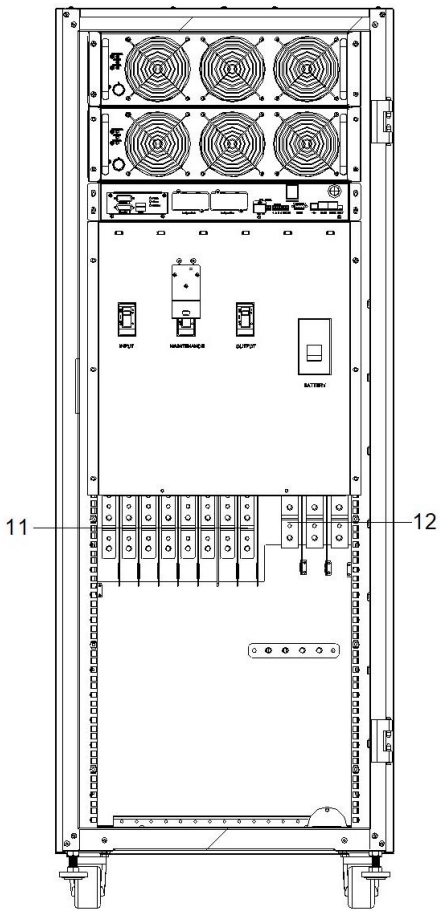

Front View (open cover)

(1) LCD panel	(2) Front door lock
(3) Power unit	(4) Monitor panel
(5) Input breaker	(6) Maintenance breaker cover
(7) Maintenance breaker	(8) Output breaker
(9) Battery breaker	(10) Connector cover
(11) Input and output connector	(12) Battery connector

Monitoring

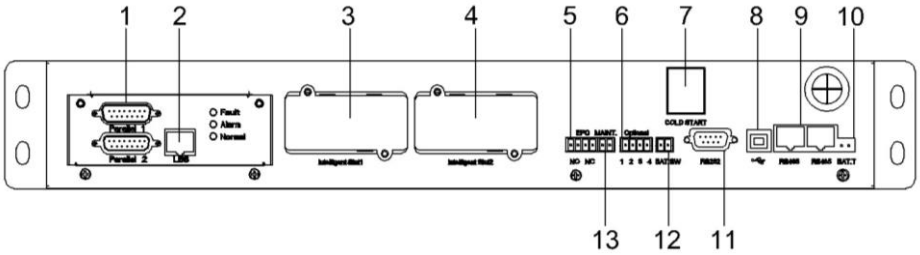

(1) Parallel ports	(2) LBS port
(3) Intelligent Slot 1 (SNMP card/ Relay card)	(4) Intelligent Slot 2 (SNMP card/ Relay card)
(5) REPO port	(6) Optional port (Port for backfeed protection, or for battery breaker driver to prevent battery over-drain after UPS shuts down)
(7) Cold-start	(8) USB port
(9) RS485 port (Rs485 communication or for RS485 temperature sensor)	(10) Temperature sensor port (for NTC)
(11) RS232	(12) BAT_SW : detect battery breaker status
(13) MAINTAIN-AUXSWS port	

3.2 LCD control panel

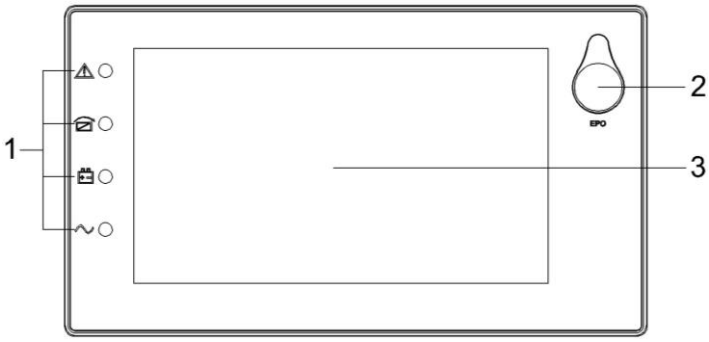

LCD control panel introduction

(1) LED（from top to bottom: “Fault”, “bypass”, “battery”, “inverter”）

(2) EPO key

(3) LCD display

3.3 Installation notes

Note: Consider for the convenience of operation and maintenance, the space in front and back of the cabinet should be left at least 100cm and 80cm respectively when installing the cabinet.

◆Please place the UPS in a clean, stable environment, avoid the vibration, dust, humidity, flammable gas and liquid, corrosive. To avoid from high room temperature, a system of room extractor fans is recommended to be installed. Optional air filters are available if the UPS operates in a dusty environment.

◆The environment temperature around UPS should keep in a range of 0℃ ~ 40℃. If the environment temperature exceeds 40℃, the rated load capacity should be reduced by 12% per 5℃. The max temperature can't be higher than 50℃.

◆If the UPS is dismantled under low temperature, it might be in a condensing condition. The UPS can't be installed unless the internal and external of the equipment is fully dry. Otherwise, there will be in danger of electric shock.

◆Batteries should be mounted in an environment where the temperature is within the required specs. Temperature is a major factor in determining battery life and capacity. In a normal installation, the battery temperature is maintained between 15°C and 25°C. Keep batteries away from heat sources or main air ventilation area, etc.

WARNING!

Typical battery performance data are quoted for an operating temperature between 20°C and 25°C. Operating it above this range will reduce the battery life while operation below this range will reduce the battery capacity.

◆Should the equipment not be installed immediately it must be stored in a room so as to protect it against excessive humidity and or heat sources.

CAUTION!

An unused battery must be recharged every 6months Temporarily connecting the UPS to a suitable AC supply mains and activating it for the time required for recharging the batteries.

◆The highest altitude that UPS may work normally with full load is 1500 meters. The load capacity should be reduced when this UPS is installed in place whose altitude is higher than 1500 meters, shown as the following table:

(Load coefficient equals max load in high altitude place divided by nominal power of the UPS)

Altitude (m)	1500	2000	2500	3000	3500	4000	4500	5000
Load coefficient	100%	95%	90%	85%	80%	75%	70%	65%

◆The UPS cooling is depending on fan, so it should be kept in good air ventilation area. There are many ventilation holes on the front and rear, so they should not be blocked by any exotic obstacles.

3.4 External Protective Devices

For safety reasons, it is necessary to install, external circuit breaker at the input A.C. supply and the battery. This chapter provides guidelines for qualified installers that must have the knowledge of local wiring practices for the equipment to be installed.

◆**External Battery**

The UPS and its associated batteries are protected against the effect of over-current through a DC compatible thermo-magnetic circuit-breaker (or a set of fuses) located close to the battery.

◆**UPS Output**

Any external distribution board used for load distribution shall be fitted with protective devices that may avoid the risk of UPS overloaded.

◆**Over-current**

Protection device shall be installed at the distribution panel of the incoming main supply. It may identify the power cables current capacity as well as the overload capacity of the system.

CAUTION!

Select a thermo magnetic circuit-breaker with an IEC 60947-2 trip curve C (normal) for 125% of the current as listed below.

3.5 Power Cables

◆The cable design shall comply with the voltages and currents provided in this section, Kindly follow local wiring practices and take into consideration the environmental conditions (temperature and physical support media) .

WARNING!

Upon starting. Please ensure that you are aware of the location and operation of the external isolators which are connected to the UPS input/bypass supply of the mains distribution panel. Check to see if these supplies are electrically isolated. And post and necessary warning signs to prevent any inadvertent operation.

3.5.1 Recommended cross-sectional areas for power cables

UPS cabinet	Cable Dimension			
	AC Input (mm^2)	AC Output (mm^2)	DC Input (mm^2)	Grounding (mm^2)
50kVA	25	16	50	16
60kVA	35	35	50	25
80kVA	50	50	70	35
100kVA	70	50	120	35
120kVA	95	70	150	50

- When selecting, connecting, and routing power cables, follow local safety regulations and rules.
- If external conditions such as cable layout or ambient temperatures change, perform verification in accordance with the IEC-60364-5-52 or local regulations.
- If primary loads are non-linear loads, increase the cross-sectional areas of neutral wires1.5–1.7 times.
- The nominal battery discharge current refers to the current of forty 12 V batteries at 480V in standard configuration.
- The maximum battery discharge current refers to the current when forty 12 V batteries in standard configuration, that is, two hundred and forty 2 V battery cells (1.67 V/cell), stop discharging.
- The battery cable specifications are selected based on 40 batteries by default and compatible with application scenarios with 30–50 batteries.
- When the mains input and bypass input share a power source, configure both types of input power cables as mains input power cables. The cables listed in Table are used only when the following requirements are met:
  − Routing mode: Routing the cables over the cable ladder or bracket in a single layer (IEC60364-5-52 middle E).
  − The ambient temperature is 30°C.
  − The AC voltage loss is less than 3%, and the DC voltage loss is less than 1%.
  − 90°C copper flexible cable.
  − The length of the AC power cables of a UPS is no longer than 30 m and DC power cables no longer than 50 m.

3.5.2 Power cable connector requirements

Model	Connector	Connection Mode	Bolt Type	Bolt Hole Diameter	Torque
50-120kVA	Mains input connector	Crimped OT terminals	M8	8.5mm	26N•m
	Battery input connector	Crimped OT terminals	M8	8.5mm	26N•m
	Output connector	Crimped OT terminals	M8	8.5mm	26N•m
	Grounding connector	Crimped OT terminals	M8	8.5mm	26N•m

3.5.3 Recommended input front-end and output back-end circuit breakers

UPS capacity	Component	Specifications
50kVA	Mains input circuit breaker	100A 3P
	Bypass input circuit breaker	100A 3P
	Output circuit breaker	100A 3P
	Battery circuit breaker	160A 3P
60kVA	Mains input circuit breaker	125A 3P
	Bypass input circuit breaker	125A 3P
	Output circuit breaker	125A 3P
	Battery circuit breaker	200A 3P
80kVA	Mains input circuit breaker	160A 3P
	Bypass input circuit breaker	160A 3P
	Output circuit breaker	160A 3P
	Battery circuit breaker	250A 3P
100kVA	Mains input circuit breaker	200A 3P
	Bypass input circuit breaker	200A 3P
	Output circuit breaker	200A 3P
	Battery circuit breaker	320A 3P
120kVA	Mains input circuit breaker	250A 3P
	Bypass input circuit breaker	250A 3P
	Output circuit breaker	250A 3P
	Battery circuit breaker	400A 3P

CAUTION!

Protective earth cable: Connect each cabinet to the main ground system. For Grounding connection, follow the shortest route possible.

WARNING!

Failure to follow adequate earthing procedures may result in electromagnetic interference or in hazards involving electric shock and fire

3.6 Power cable connect

Once the equipment has been finally positioned and secured, connect the power cables as described in the following procedure.

Verify the UPS is totally isolated from its external power source and also all power isolators of the UPS are open. Check to see if they are electrically isolated, and post any necessary warning signs to prevent their inadvertent operation.

Open the UPS rear panel; Remove the cover of terminals for wiring easily.

50kVA&60kVA&80kVA

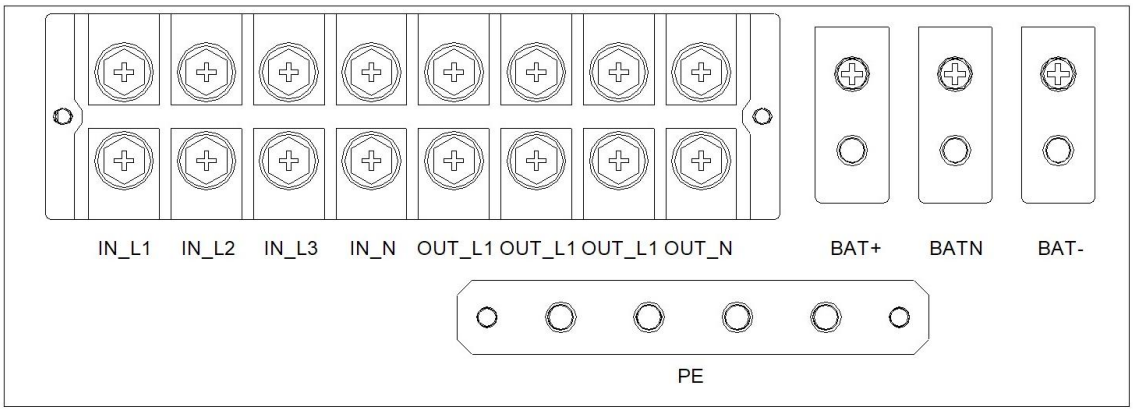

100kVA&120kVA

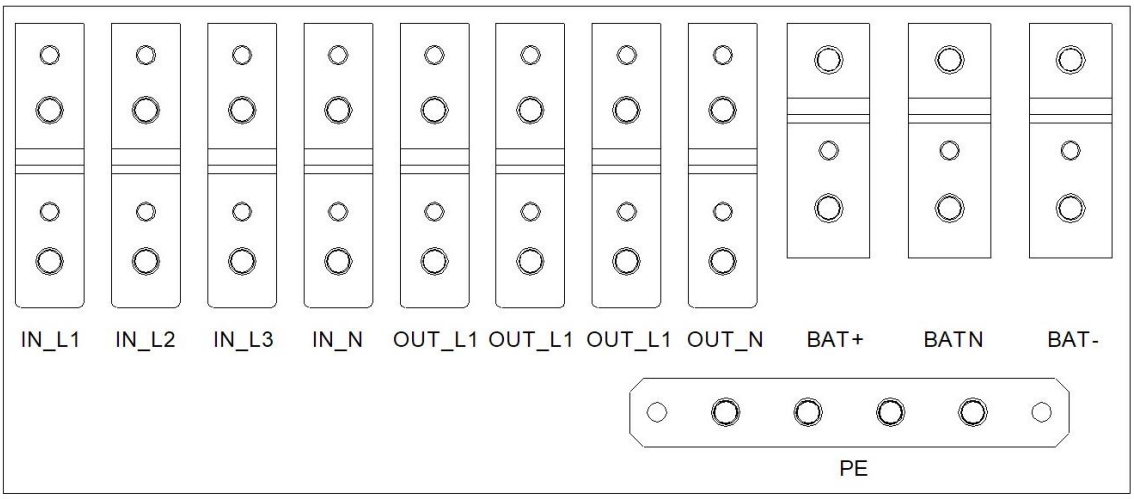

Warning !

In the case of “Dual input” operation, make sure the copper wire between each input lines have been removed. The AC input and the AC bypass supplies must be referenced to the same neutral point.

Choose appropriate power cable. (Refer to the table above) and pay attention to the diameter of the connection terminal of the cable that should be greater than or equal to that of the connection poles;

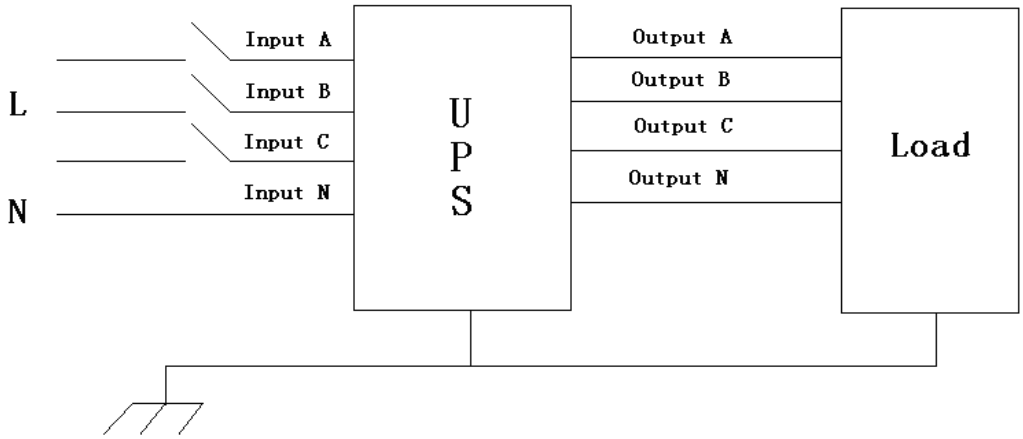

WARNING!

If the load equipment is not ready to accept power on the arrival of the commissioning engineer then ensure that the system output cables are safely isolated at their ends

Connect the safety earth and any necessary bonding earth cables to the copper earth screw located on the floor of the equipment below the power connections. All cabinets in the UPS must be grounded properly.

CAUTION!

The earthing and neutral bonding arrangement must be in accordance with local and national codes of practice.

3.7 Battery connection

3.7.1 Built-in battery

The UPS adopts positive and negative double battery framework, total 20 in series. A neutral cable is retrieved from the joint between the cathode of the 10th and the anode of the 11th of the batteries. Then the neutral cable, the battery Positive and the battery negative are connected with the UPS respectively. The battery sets between the Battery anode and the neutral are called positive batteries and that between neutral and cathode are called negative ones.

50/60/80K(S) built-in 6 group battery, the capacity of the battery is 7Ah or 9Ah.

Connections for built-in battery

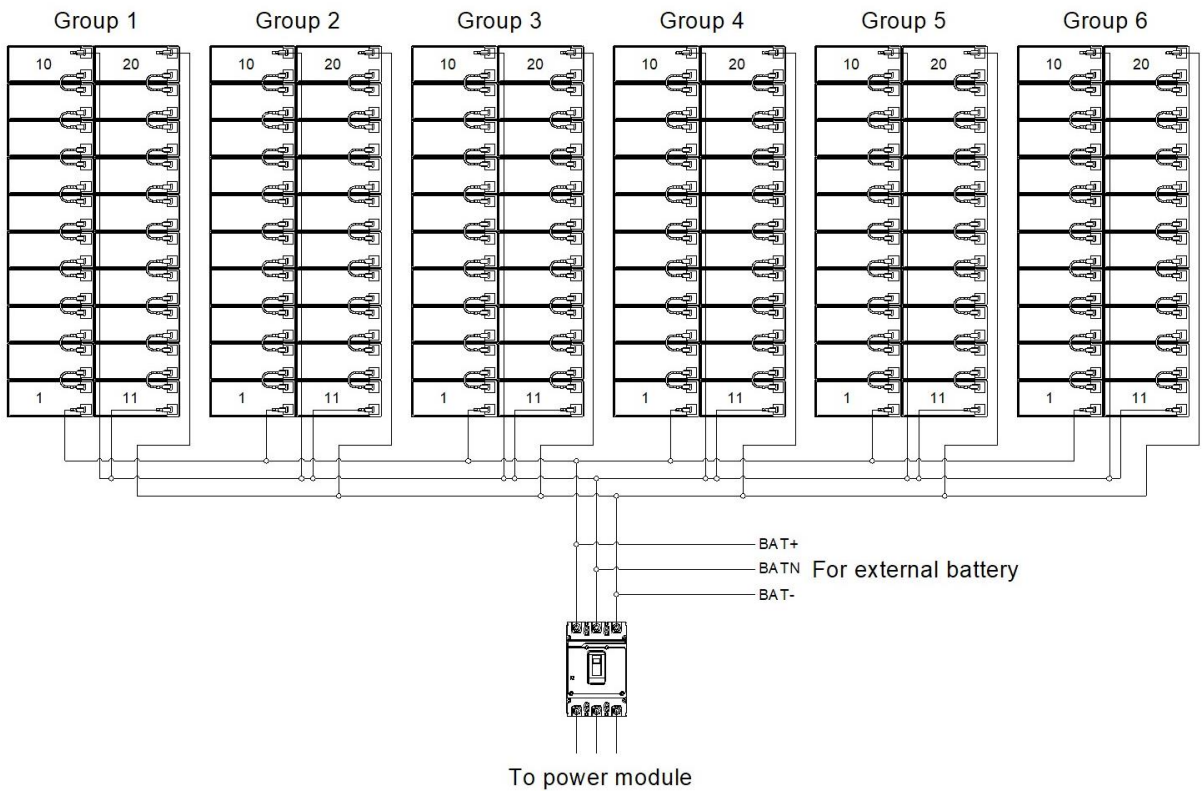

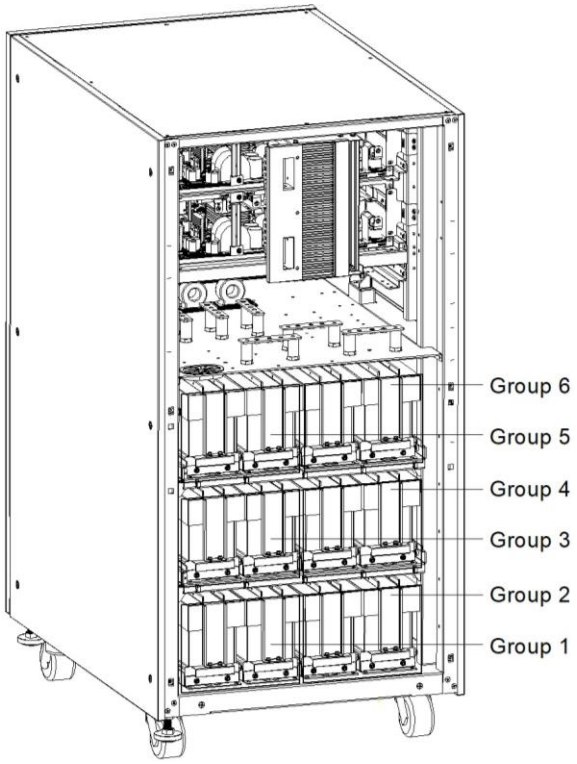

Rear side of the cabinet (remove rear cover)

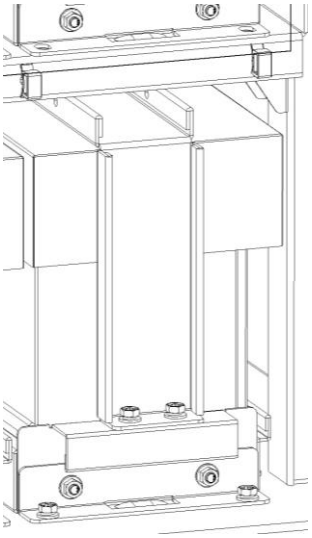

Screws of the battery kit

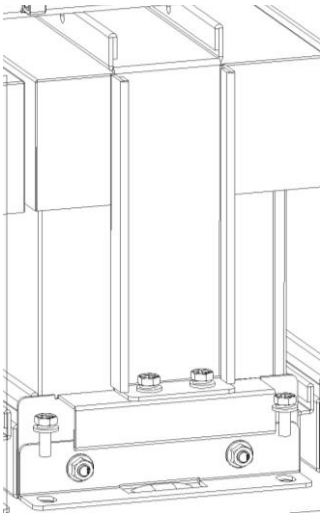

Remove screws to remove the battery kit

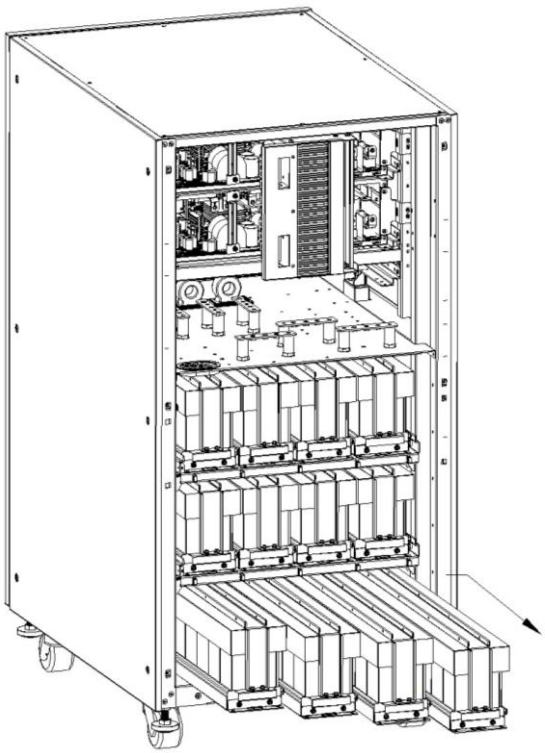

Rear side of the cabinet (pull out the battery)

100/120K(S) built-in 10 group battery, the capacity of the battery is 7Ah or 9Ah.

Connections for built-in battery

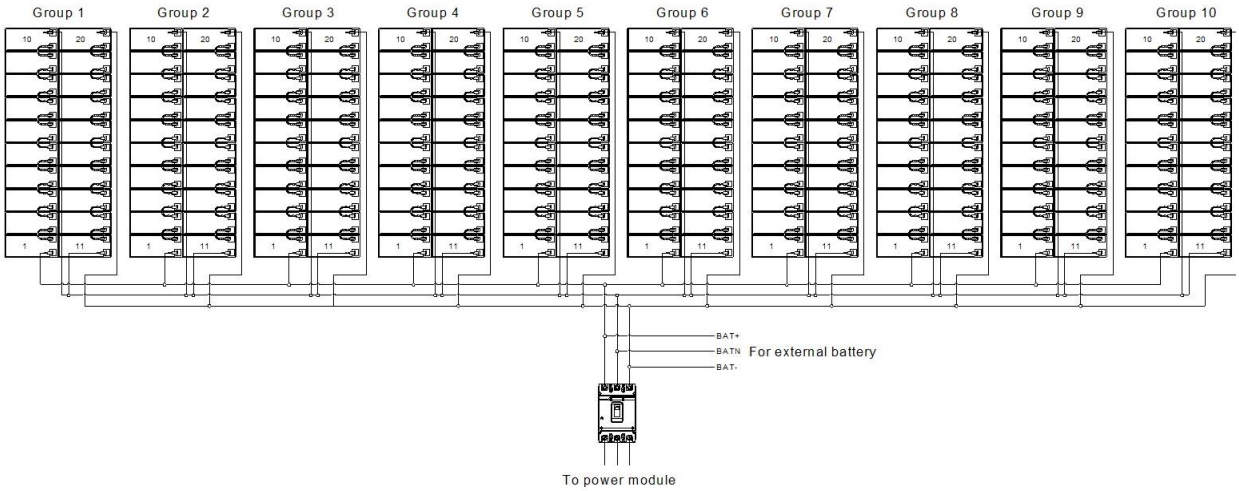

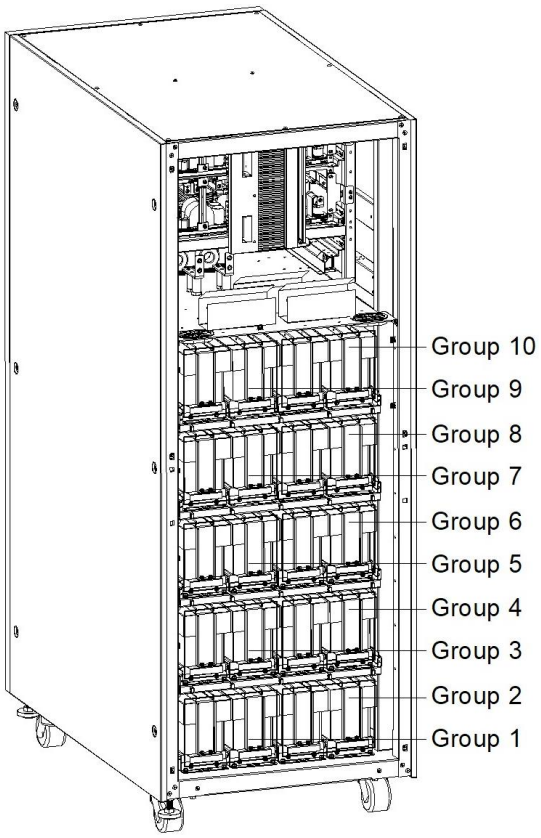

Rear side of the cabinet (remove rear cover)

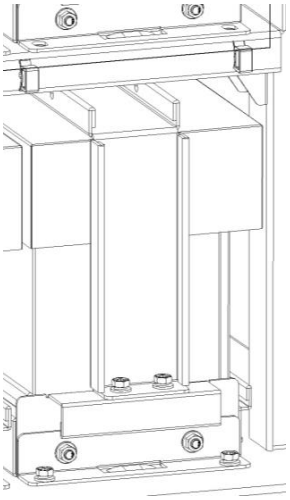

Screws of the battery kit

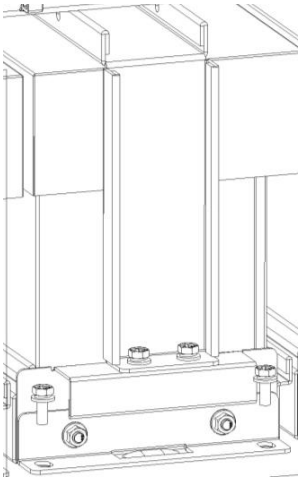

Remove screws to remove the battery kit

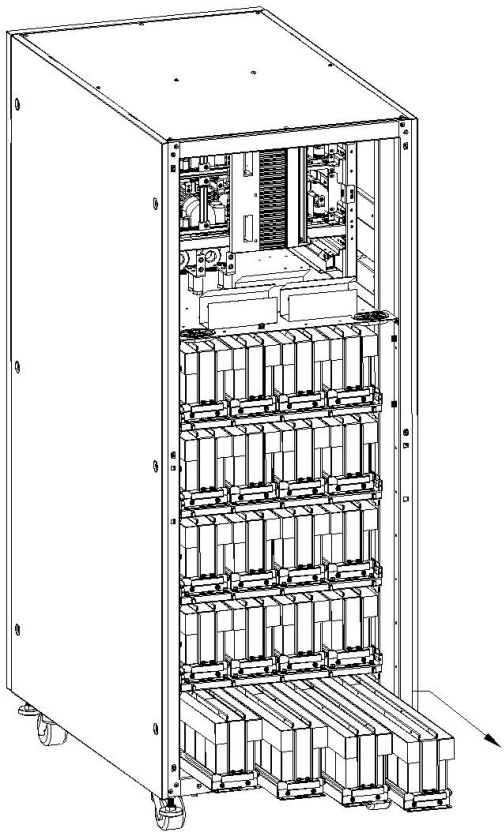

Rear side of the cabinet (pull out the battery)

3.7.2 External battery

The UPS adopts positive and negative double battery framework, total 30(optional 32/34/36/38/40/42/44/46/48/50) in series. A neutral cable is retrieved from the joint between the cathode of the 15th (16th/17th/18 th/19th/20 th/21 th/22 th/23 th/24 th/25 th) and the anode of the 16th (17th/18th/19 th/20th/21 th/22 th/23th/24 th/25 th/26 th) of the batteries. Then the neutral cable, the battery Positive and the battery negative are connected with the UPS respectively. The battery sets between the Battery anode and the neutral are called positive batteries and that between neutral and cathode are called negative ones. The user can choose the capacity and the numbers of the batteries according to their desire.

External battery connections for long-run units.

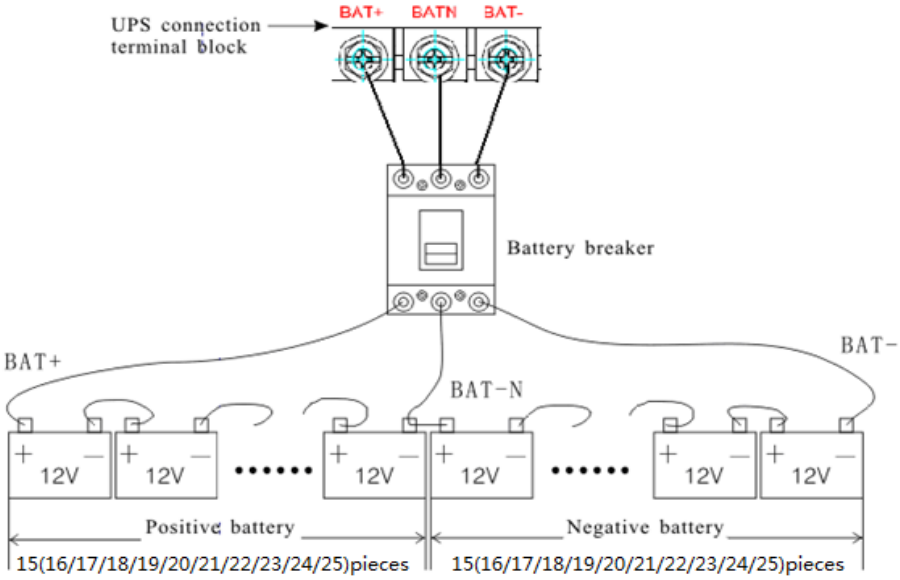

Note：

The BAT+ of the UPS connect poles is connected to the anode of the positive battery, the BAT-N is connected to the cathode of the positive battery and the anode of the negative battery, the BAT- is connected to the cathode of the negative battery.

Factory setting of the long-run unit is battery quantity---30pcs, battery capacity---12V100AH (charger current 15A). When connecting 32/34/36/38/40/42/44/46/48/50 batteries, please re-set desired battery quantity and its capacity after UPS starts at AC mode. Charger current could be adjusted automatically according to battery capacity selected. All related settings can be done through LCD panel or monitoring software

CAUTION!

Ensure correct polarity battery string series connection. I.e. inter-tier and inter block connections are from (+) to (-) terminals.

Don't mix batteries with different capacity or different brands, or even mix up new and old batteries, either.

WARNING!

Ensure correct polarity of string end connections to the Battery Circuit Breaker and from the Battery Circuit Breaker to the UPS terminals i.e. (+) to (+) / (-) to (-) but disconnect one or more battery cell links in each tier. Do not reconnect these links and do not close the battery circuit breaker unless authorized by the commissioning engineer.

3.8 UPS parallel Installation

The following sections introduce the installation procedures specified to the parallel system.

3.8.1 Cabinet installation

Connect all the UPS needed to be put into parallel system as below picture.

Common input:

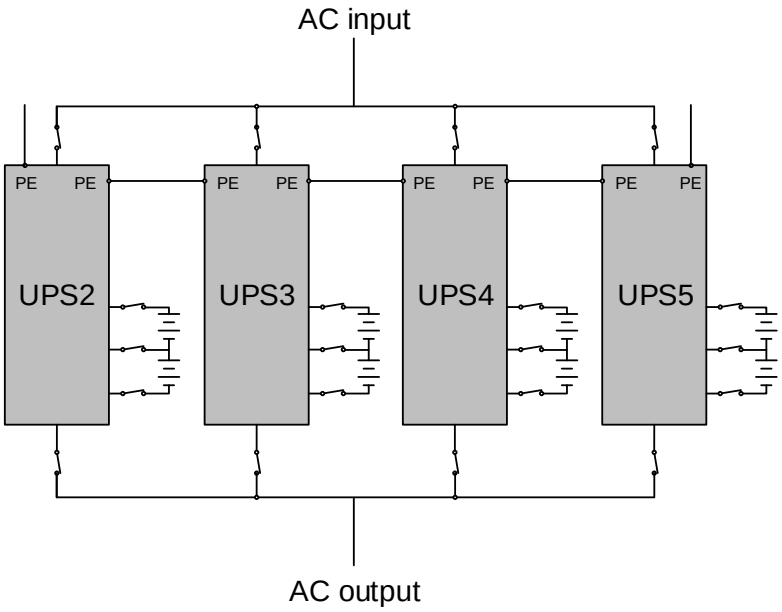

Dual input:

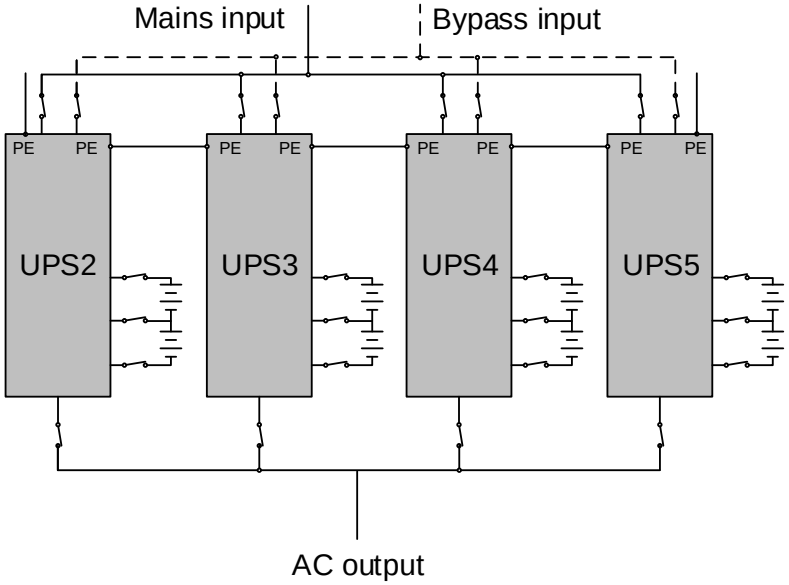

Make sure each UPS input breaker is in “off” position and there is no any output from each UPS connected. Battery groups can be connected separately or in parallel, which means the system itself provides both separate battery and common battery.

WARNING!

Make sure the N, A (L1), B (L2), C (L3) lines are correct, and grounding is well connected.

3.8.2 Parallel cable installation

Shielded and double insulated control cables available must be interconnected in a ring configuration between UPS units as shown below. The ring configuration ensures high reliability of the control.

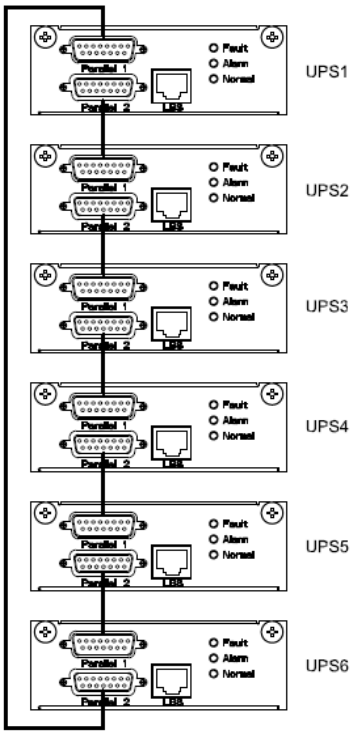

3.8.3 Requirement for the parallel system

A group of paralleled UPS behaves as one large UPS system but with the advantage of presenting higher reliability. In order to assure that all UPS are equally utilized and comply with relevant wiring rules, please follow the requirements below:

1) All UPS must be of the same rating and be connected to the same bypass source.
2) The outputs of all the UPS must be connected to a common output bus.
3) The length and specification of power cables including the bypass input cables and the UPS output cables should be the same. This facilitates load sharing when operating in bypass mode.
4) The ground of each UPS must be connected in series and reliably connected to the ground.

3.9 LBS installation

LBS system contains LCD set, commucation cable and STS device.

3.9.1 LCD setting

Set every UPS of the systems to be LBS Master or LBS Slave. For instance if the UPS belongs to LBS master system, its LBS setting must be set to Master.

3.9.2 LBS cable installation

The two ports of one mesh wire should be plug into RJ45 interface of any one UPS of both master and slave system.

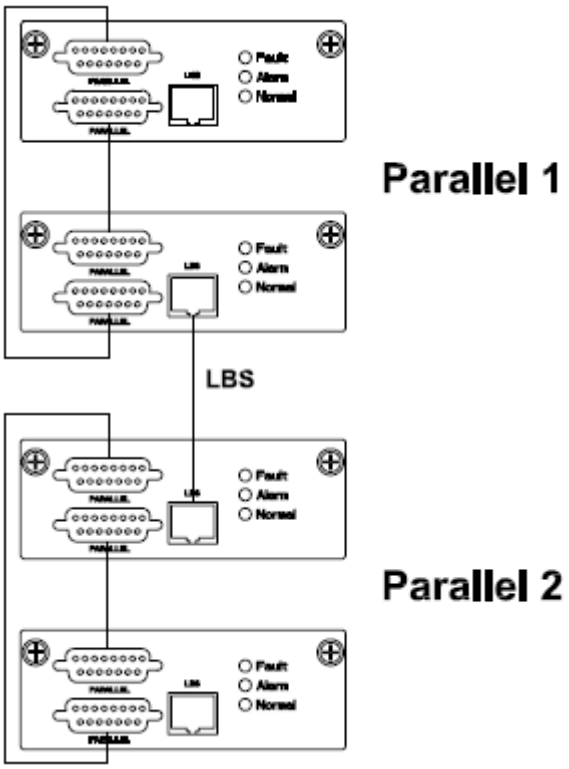

3.9.3 UPS installation

The whole systems is showed below.

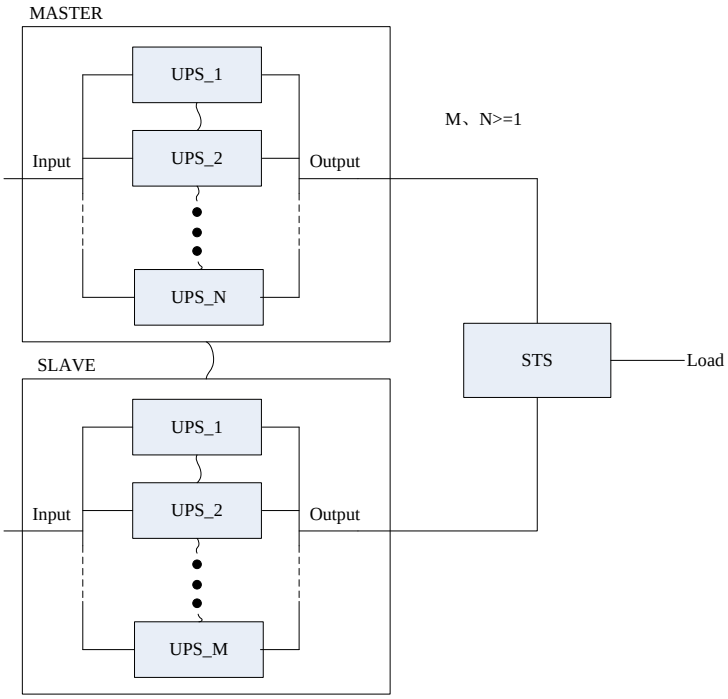

3.10 Computer access

◆One end of a USB cable connect to the computer, the other end connect to the USB port on the UPS.

◆Open the software Muser5000, click “system” button.

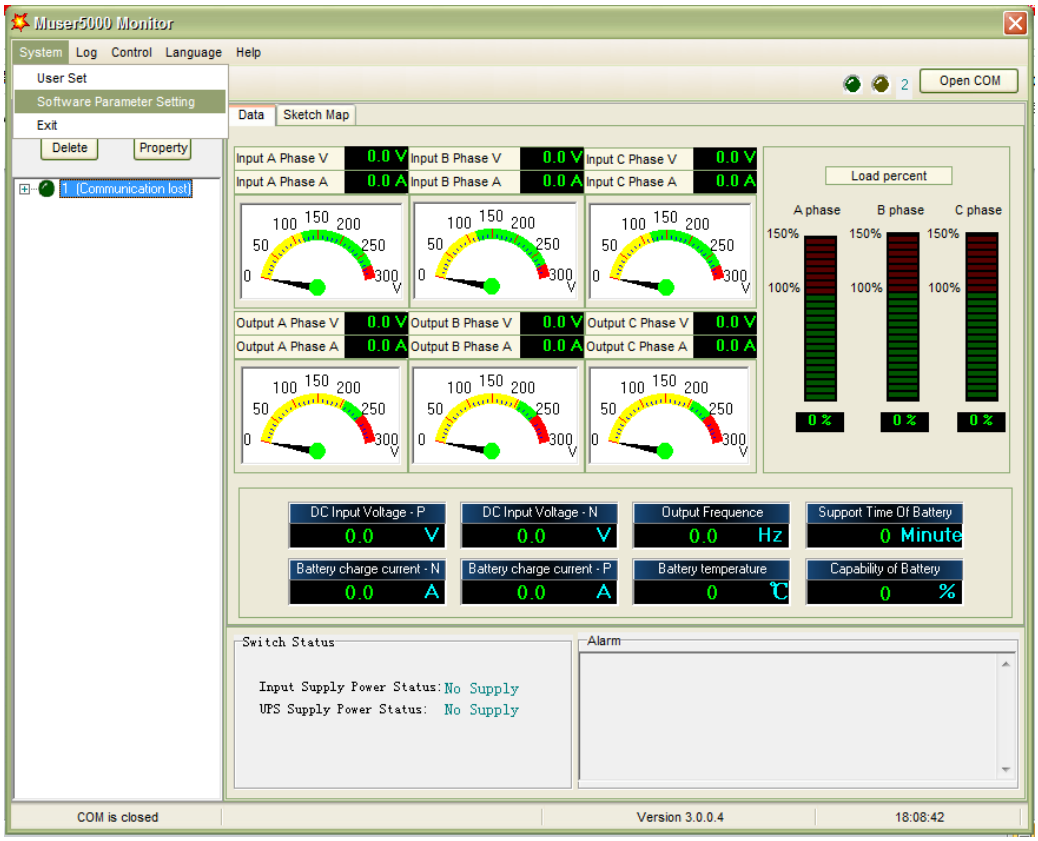

◆A window of “Software Parameter Setting” comes out as below, COM choose according to the UPS , baud rate choose 9600, protocol choose “modbus”, then save this setting.

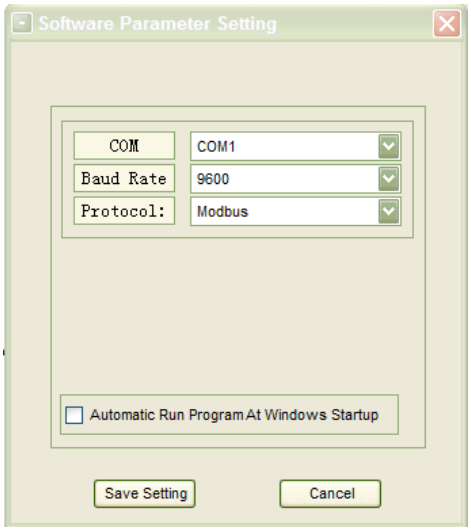

◆On the main page of Muser5000, click the button of “Append”, then goes to a window of “Append equipment”.

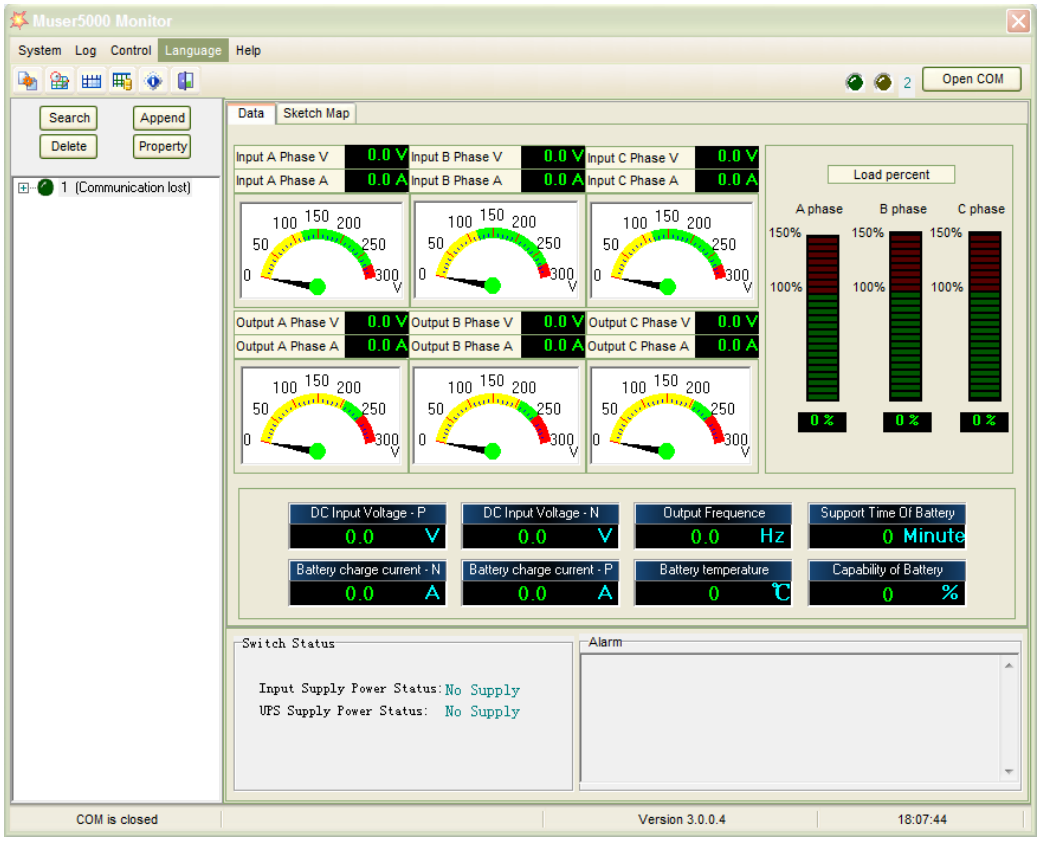

◆Put the UPS name into “Equipment Name”, and UPS’ ID address into “Equipment address”.

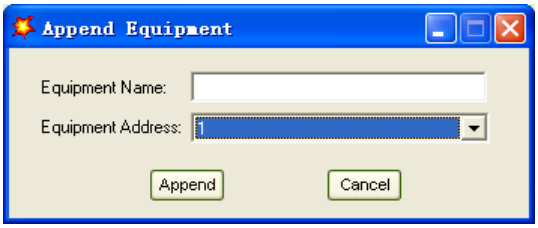

◆Click the button “Append”, then the connection between UPS & computer is accomplished.

CAUTION!

When the UPS worked on inverter. If you want to use PC to set the output voltage and frequency. Must shut down the inverter first

4 . Operation

4.1 Operation Modes

The UPS is a double-conversion on-line UPS that may operate in the following alternative modes：

◆Normal mode

The rectifier/charger derives power from the AC Mains and supplies DC power to the inverter while floating and boosting charge the battery simultaneously. Then, the inverter converts the DC power to AC and supplies to the load.

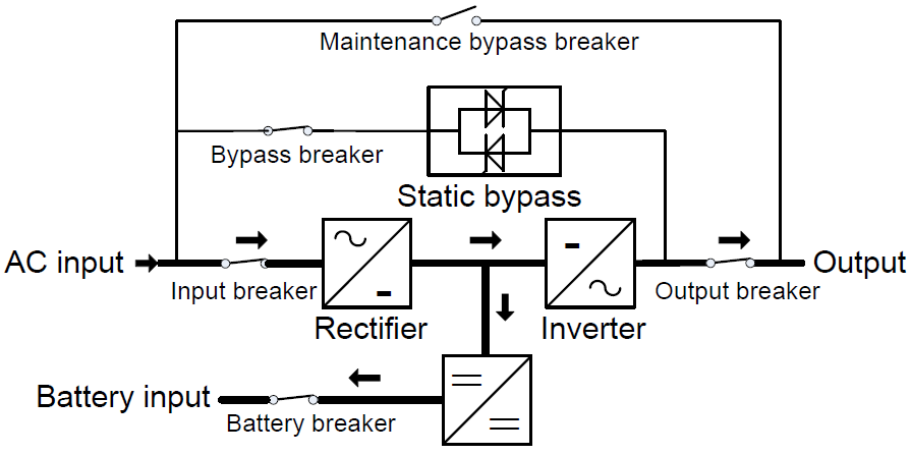

◆Battery mode (Stored Energy Mode)

If the AC mains input power fails, the inverter, which obtains power from the battery, supplies the critical AC load. There is no power interruption to the critical load. The UPS will automatically return to Normal Mode when AC recovers.

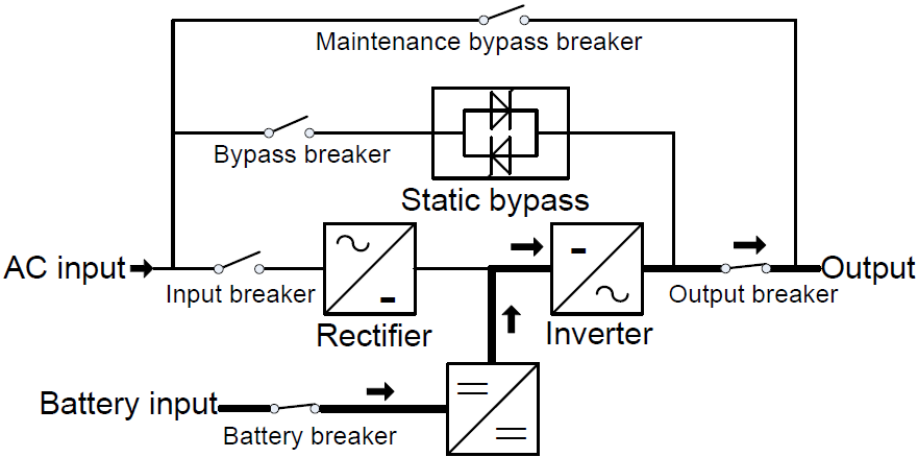

◆**Bypass mode**

If the inverter is out of order, or if overload occurs, the static transfer switch will be activated to transfer the load from the inverter supply to bypass supply without interruption to the critical load. In the event that the inverter output is not synchronized with the bypass AC source, the static switch will perform a transfer of the load from the inverter to the bypass with power interruption to the critical AC load. This is to avoid paralleling of unsynchronized AC sources. This interruption is programmable but typically set to be less than an electrical cycle e.g. less than 15ms (50Hz) or less than 13.33ms (60Hz).

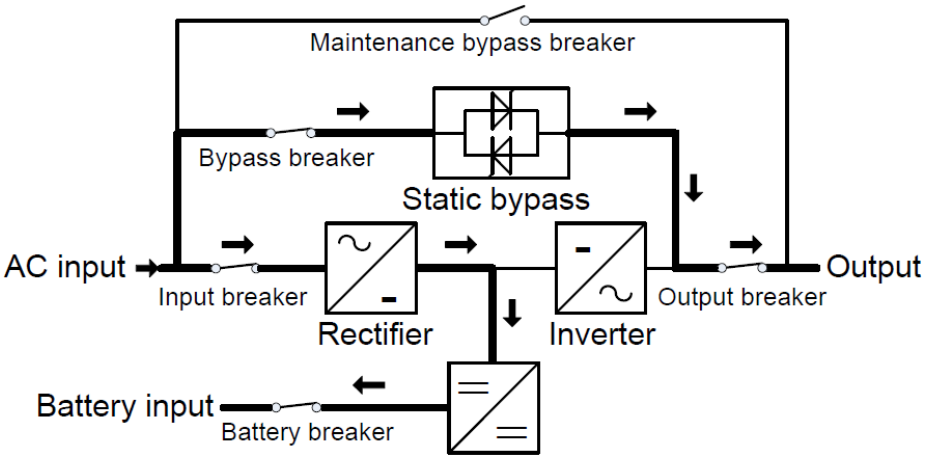

◆**ECO Mode**

When the UPS is at AC Mode and the requirement to the load is not critical, the UPS can be set at ECO mode in order to increase the efficiency of the power supplied. At ECO mode, the UPS works at Line-interactive mode, so the UPS will transfer to bypass supply. When the AC is out of set window, the UPS will transfer from bypass to Inverter and supplies power from the battery, and then the LCD shows all related information on the screen.

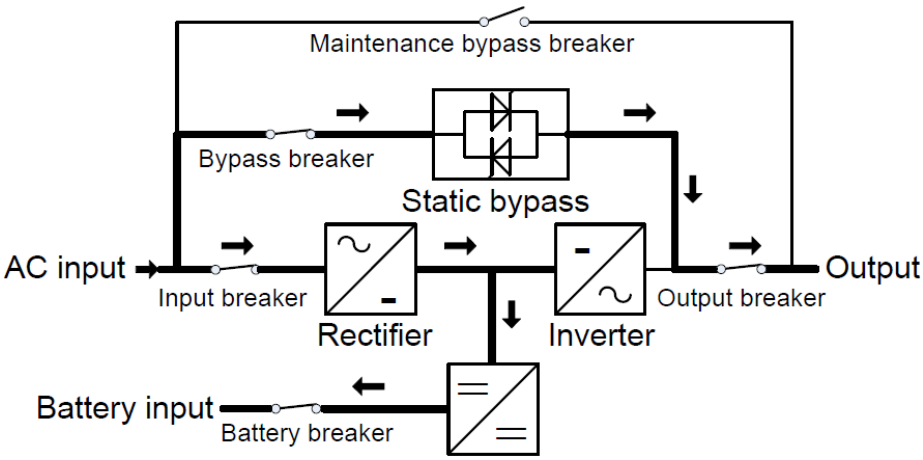

◆**Maintenance mode (Manual Bypass)**

A manual bypass switch is available to ensure continuity of supply to the critical load when the UPS is out of order or in repair and this manual bypass switch bears for equivalent rated load.

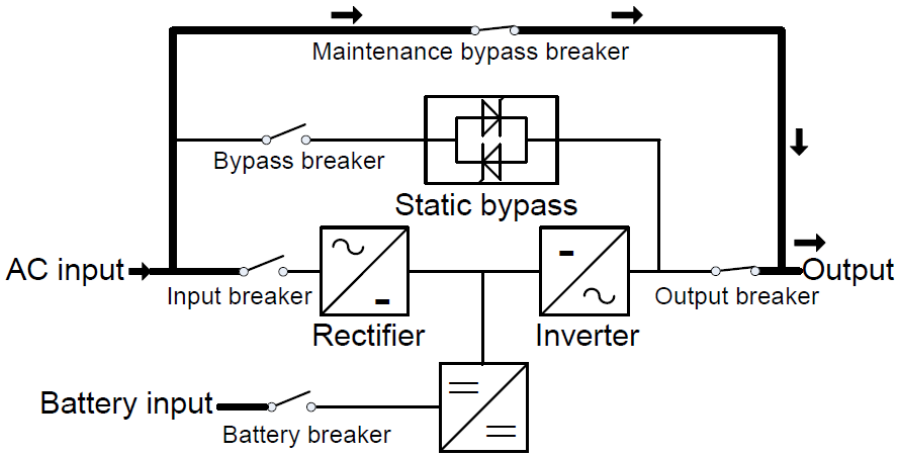

4.2 Turn on/off UPS

4.2.1 Restart procedure

CAUTION!

MAKE SURE GROUNDING IS PROPERLY DONE!

- Set the Battery Breaker to the “ON” position according to the user’s manual.

CAUTION !

Check to see if the load is safely connected with the output of the UPS. If the load is not ready to receive power from the UPS, make sure that it is safely isolated from the UPS output terminals

- Turn ON OUTPUT breaker. (Below the UPS power units at the front door)
- Turn ON BYPASS breaker (if have) and MAINS breaker. (Below the UPS power units at the front door)

If the Rectifier input is within voltage range, the rectifier will start up in 30 seconds then the inverter will start up after then.

If the rectifier fails at startup, the bypass LED will light up. When the inverter starts up, the UPS will transfer from bypass mode to inverter mode, then the bypass LED extinguishes and the inverter LED lights up.

No matter whether the UPS can work normally or not, all the status will be shown on the LCD display.

4.2.2 Test procedure

CAUTION!

The UPS is operating normally. It may take 60 seconds to boost up the system and perform self-test completely.

- Switch off the MAINS to simulate utility failure, the rectifier will turn off and the battery should feed the inverter without interruption. At this time, the LEDs of battery should be turned on.

- Switch on the MAINS to simulate utility recovery, the rectifier will restart automatically after 20 seconds and the inverter will supply to the load. It is suggested to use Dummy loads for testing. The UPS can be loaded up to its maximum capacity during load test。

4.2.3 MAINTENANCE BYPASS

To supply the load via Mains, you may simply active the internal mechanical bypass switch.

CAUTION!

The load is not protected by the UPS when the internal mechanical bypass system is active and the power is not conditioned.

Switch to mechanical bypass

CAUTION!

If the UPS is running normally and can be controlled through the display, carry out steps 1 to 6; otherwise, jump to Step 5.

- Open the cover of maintenance switch, the UPS turns to bypass mode automatically.
- Turn on MAINTANCE breaker;
- Turn off BATTERY breaker;
- Turn off MAINS breaker;
- Turn off BYPASS breaker (if have);
- Turn off OUTPUT breaker;

At this time the bypass source will supply to the load through the MAINTENANCE breaker.

Switch to normal operation (from mechanical bypass)

CAUTION!

Never attempt to switch the UPS back to normal operation until you have verified that there are no internal UPS faults.

- Turn ON OUTPUT breaker.
- Turn ON BYPASS breaker (if have).
- Turn ON MAINS breaker.

The UPS powers from the static bypass instead of the maintenance bypass, then the bypass LED will light up.

- Turn off the maintenance bypass breaker, then the output is supplied by the static bypass of the UPS.
- Put on the maintenance switch cover.

The rectifier will operate normally after 30 seconds. If the inverter works normally, the system will be transferred from bypass mode to normal mode.

4.2.4 Cold start procedure

CAUTION!

Follow these procedures when the input AC Utility Failure, but battery is normal

- Turn on the BATTERY breaker.

  The battery will feed the Auxiliary power board.

- Turn on the OUTPUT breaker.

- Trigger the cold start(Cold start) button as the position 11 of the below drawing.

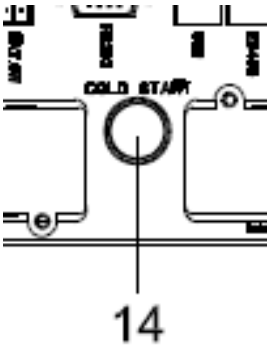

When battery normal, rectifier starts operation, 30s later, inverter starts and operates and battery LED on.

CAUTION!

Please press the close start button after 30 seconds until closing the battery switch.

4.2.5 Shut down procedure

CAUTION!

This procedure should be followed to completely shut down the UPS and the LOAD. After all power switches, isolators and circuit breakers are opened, there will be no output.

- Turn off the BATTERY breaker；
- Open the UPS door to easily access to the main power switch；
- Turn off the MAINS breaker.
- Turn off the BYPASS breaker (if have).
- Open the OUTPUT breaker. The UPS shuts down；
- To completely isolate the UPS from AC Mains, all input switches of Utility shall be completely off, which includes the ones for rectifier and bypass.
- The primary input distribution panel, which is often located far away from the UPS area, so a label should be posted to advise service personnel that the UPS circuit is under maintenance.

WARNING!

Wait for about 5 minutes for the internal D.C. bus bar capacitors to be completely discharged.

4.2.6 Parallel setting

- Connect the UPS with computer. Power on the UPS.
- Open Muser5000 software, after connecting with the UPS successfully, click "System"->"User Set"

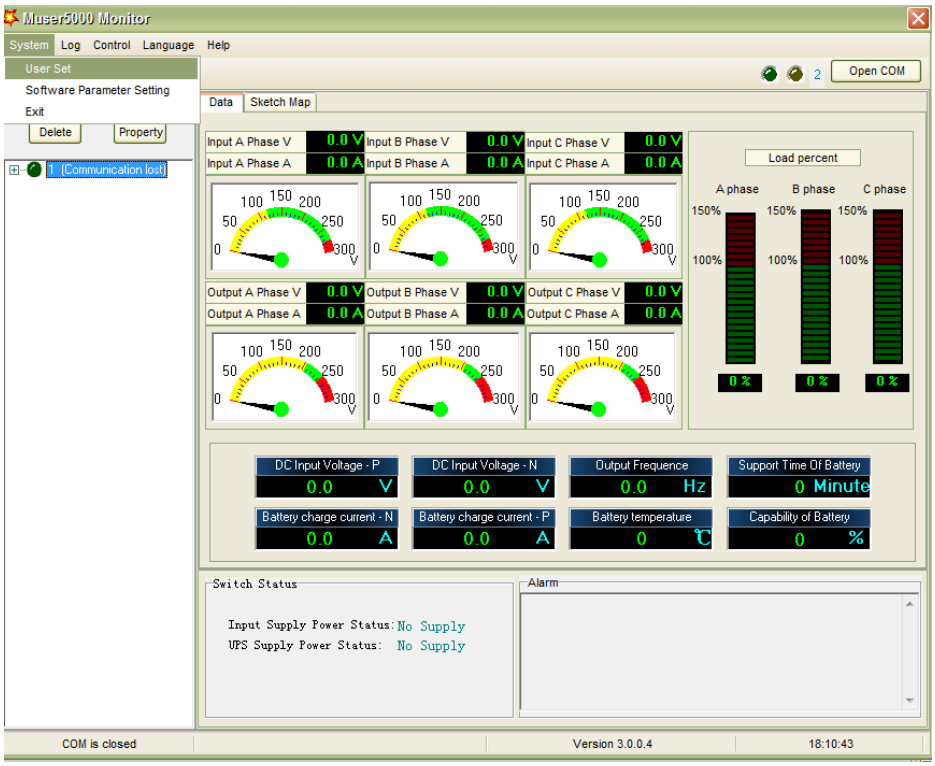

- Click "Set" at "User Set" window;

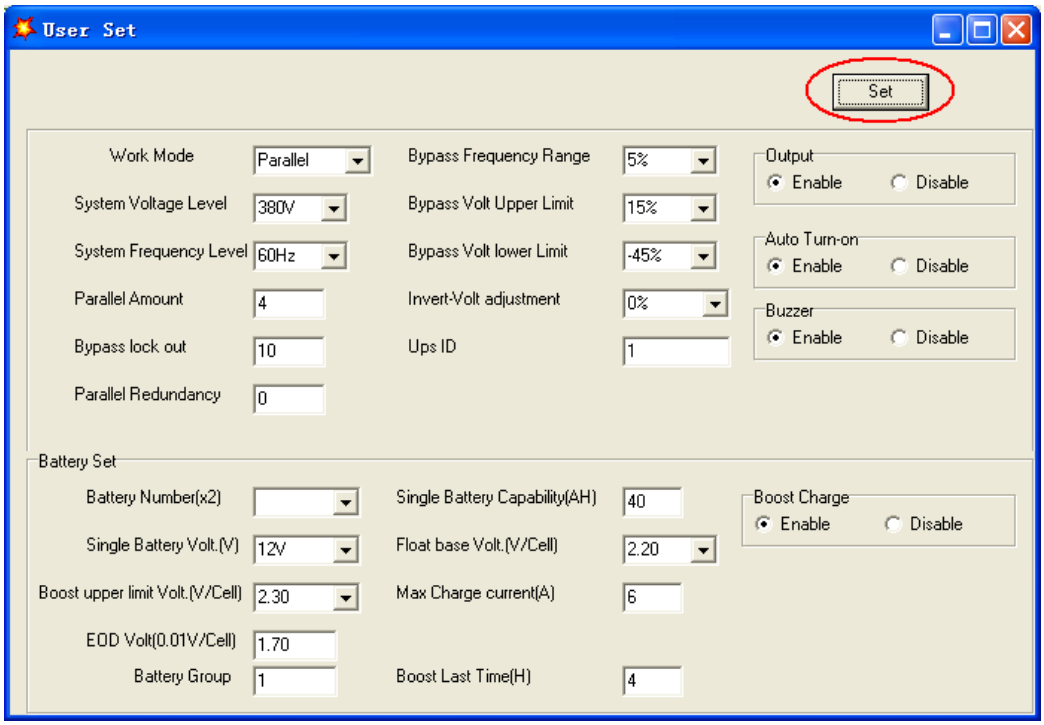

◆At the window of “Data Set”, click “Work Mode”,, choose “Parallel” for the value, then click “Set” as shown in below picture. If the UPS sounds a “beep”, that means the setting is correct.

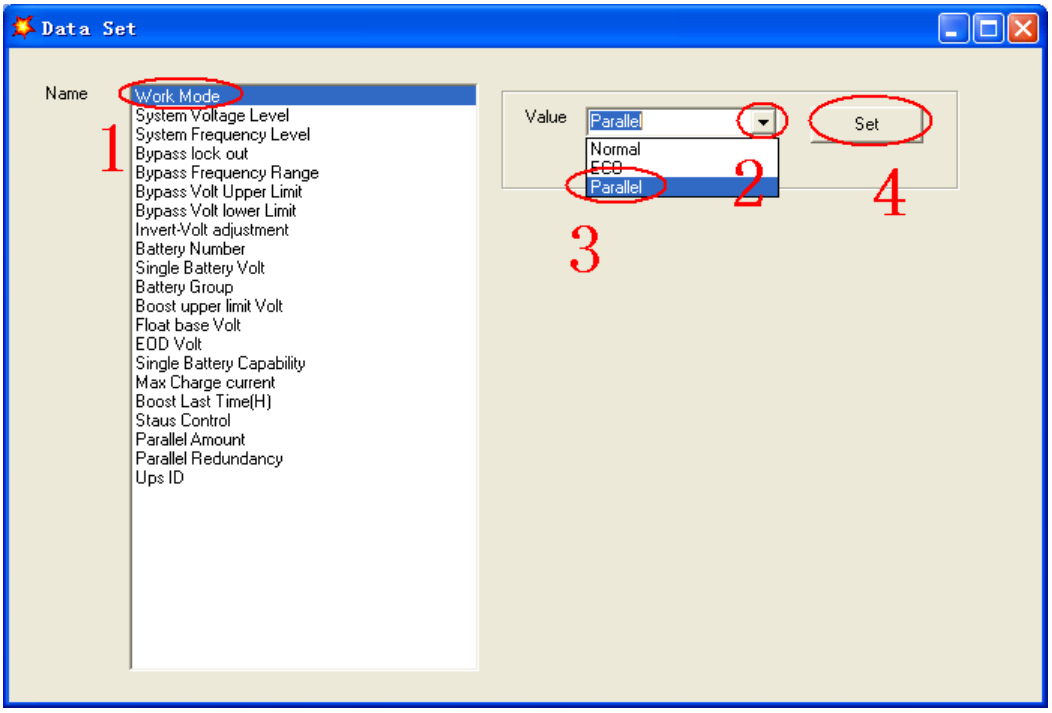

◆At the window of “Data Set”, click “Ups ID”, write a value for the parallel UPS ID at the right side, such as “1”, then click “Set” as shown in below picture. If the UPS sounds a “beep”, that means the setting is correct.

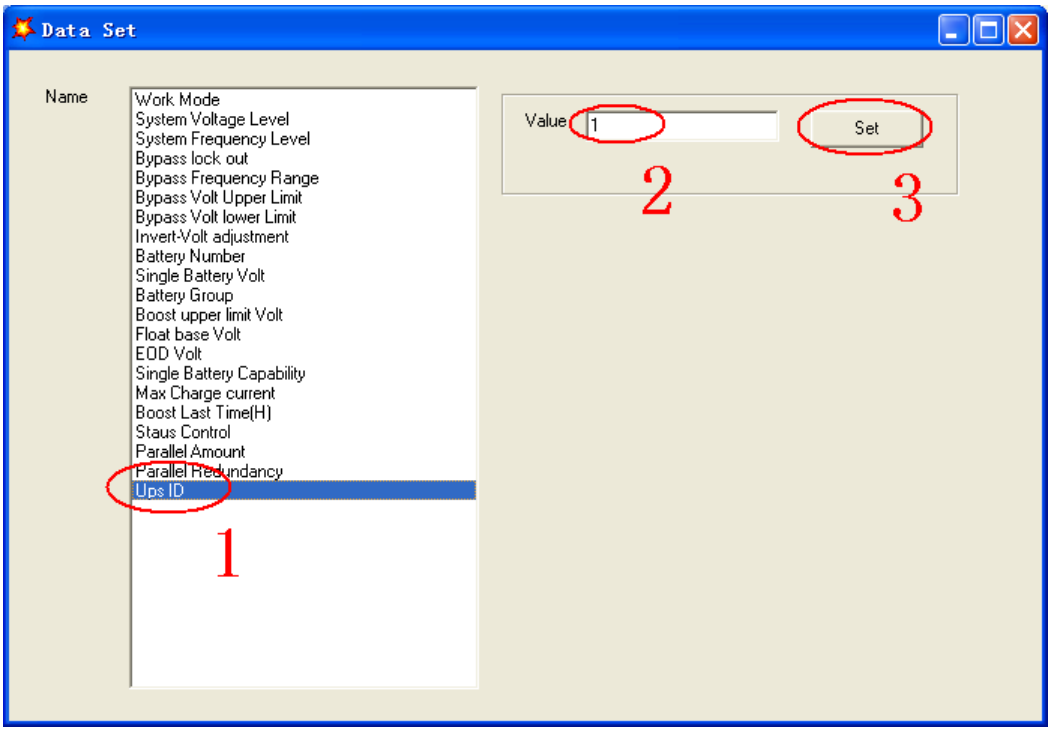

CAUTION!

After changing the parallel system ID, the connection between Muser4000 and equipment might be interrupted. If it occurs, please re-connect in accordance with the instruction described before.

CAUTION!

Parallel cable cannot be connected when setting the parallel parameters.

◆After setting the UPS needed to be paralleled, power off all the UPS. Connect all the UPS according to “parallel cable installation”, and then power on the UPS.

4.3 The LCD Display

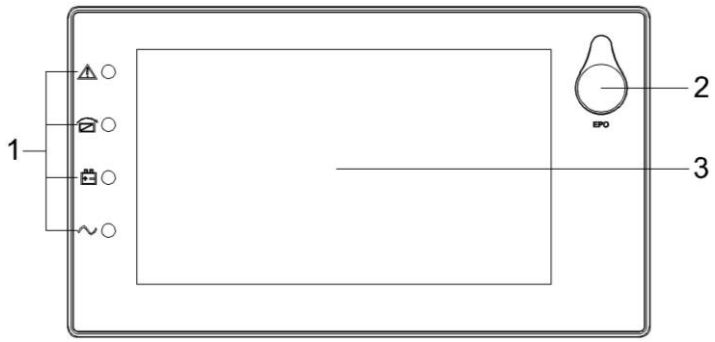

LCD control panel introduction

(1) LED（from top to bottom: “Fault”, “bypass”, “battery”, “inverter”）

(2) EPO key

(3) LCD display

Introduction

CAUTION!

The display provides more functions than those described in this manual.

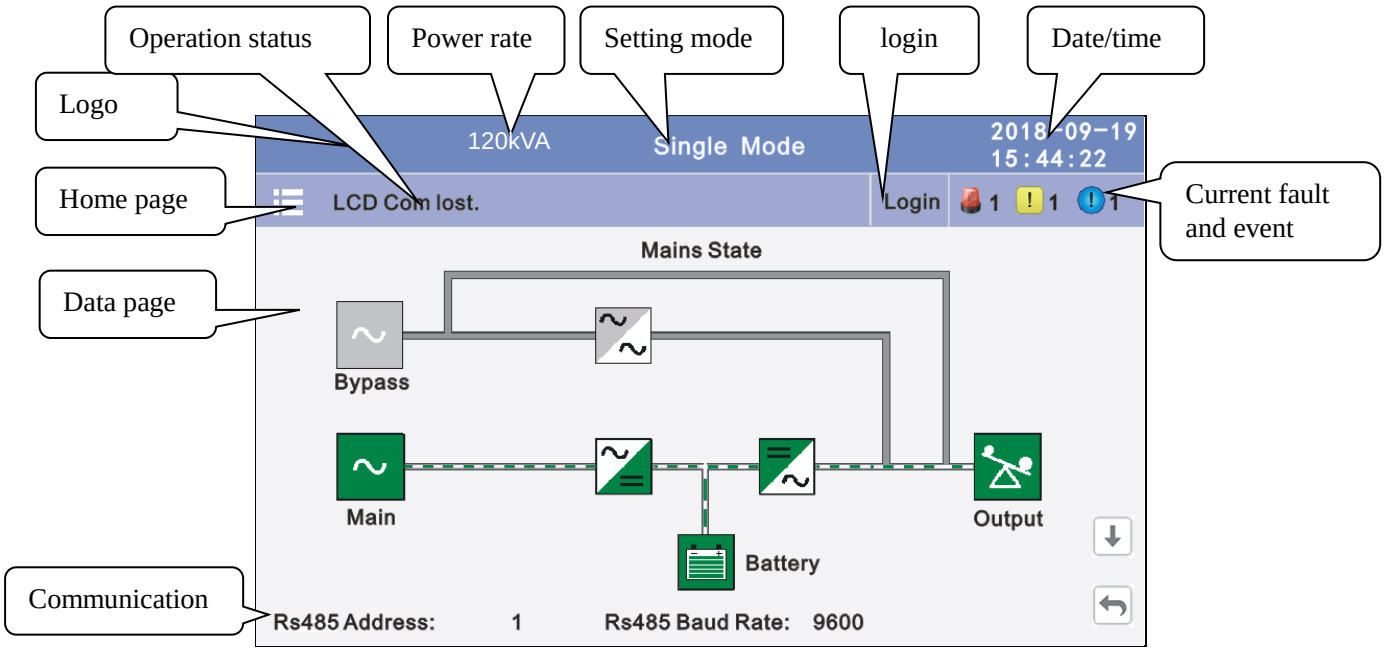

4.3.1 Datas: Displays the flow state of UPS work, and quickly enters real-time data by clicking on the block.

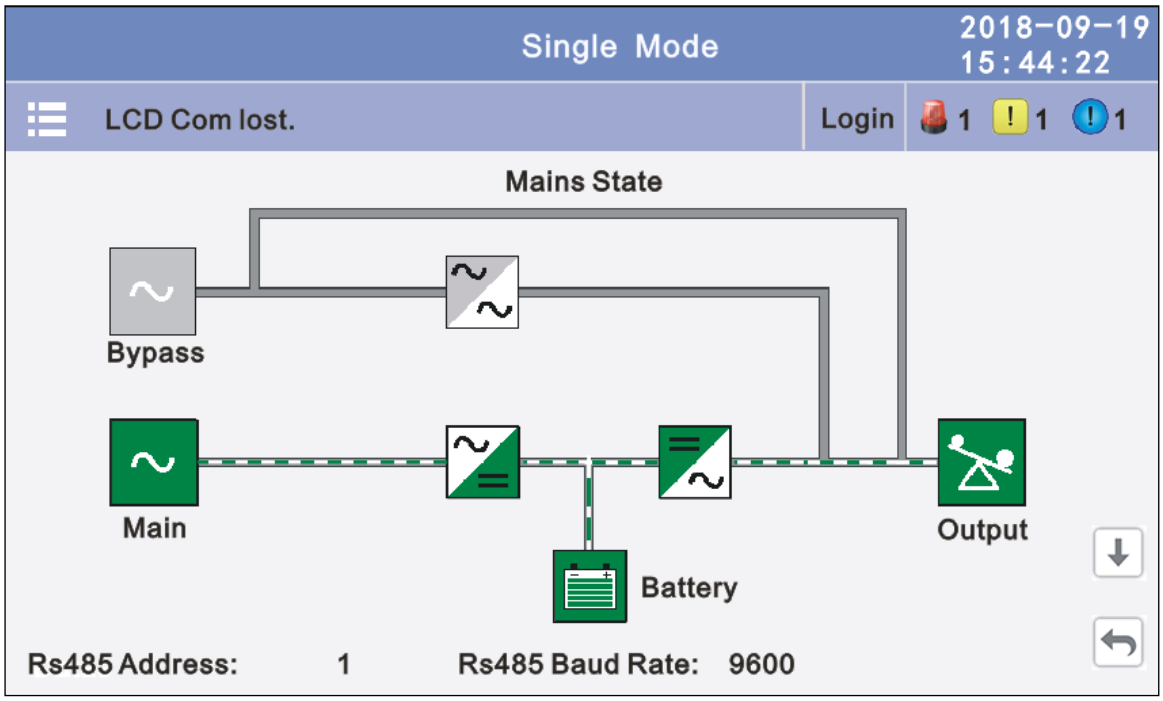

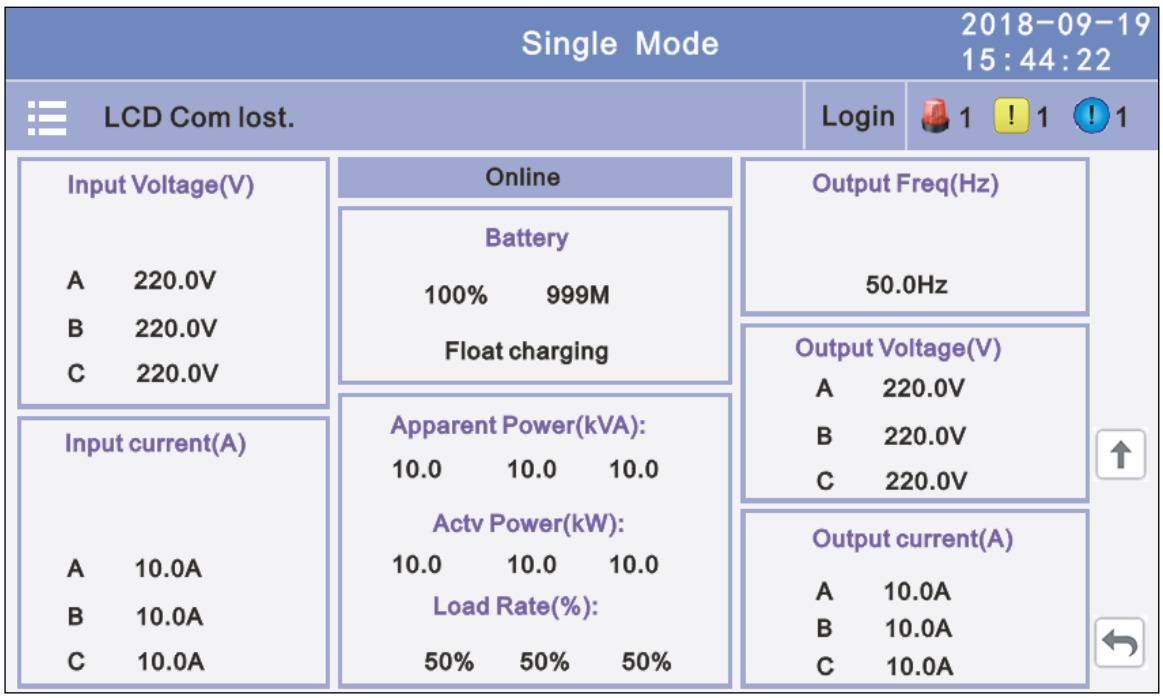

4.3.2 Status: View the voltage and current of the main, bypass, output, battery (can also be entered through by real-time data block), view the status of the switches, dry contacts, through clicking on the block, enter the corresponding data window.

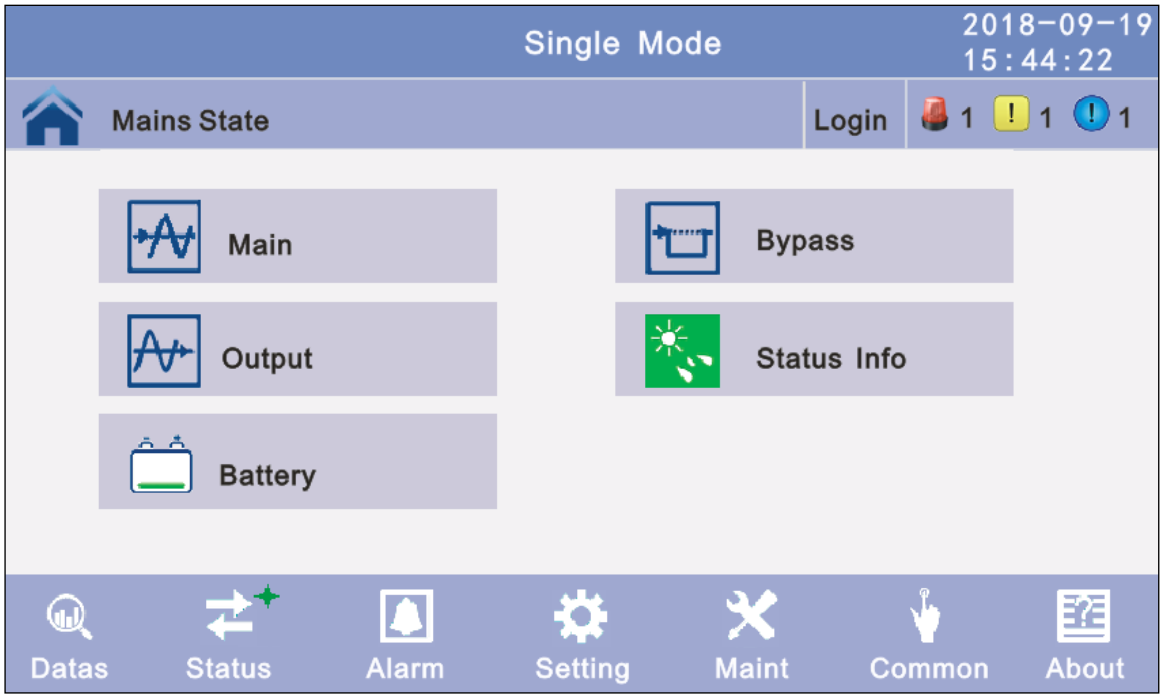

4.3.2.1 Main: Click the main block to enter the main data display window, click return to return to the previous window, click home page to return to the main page.

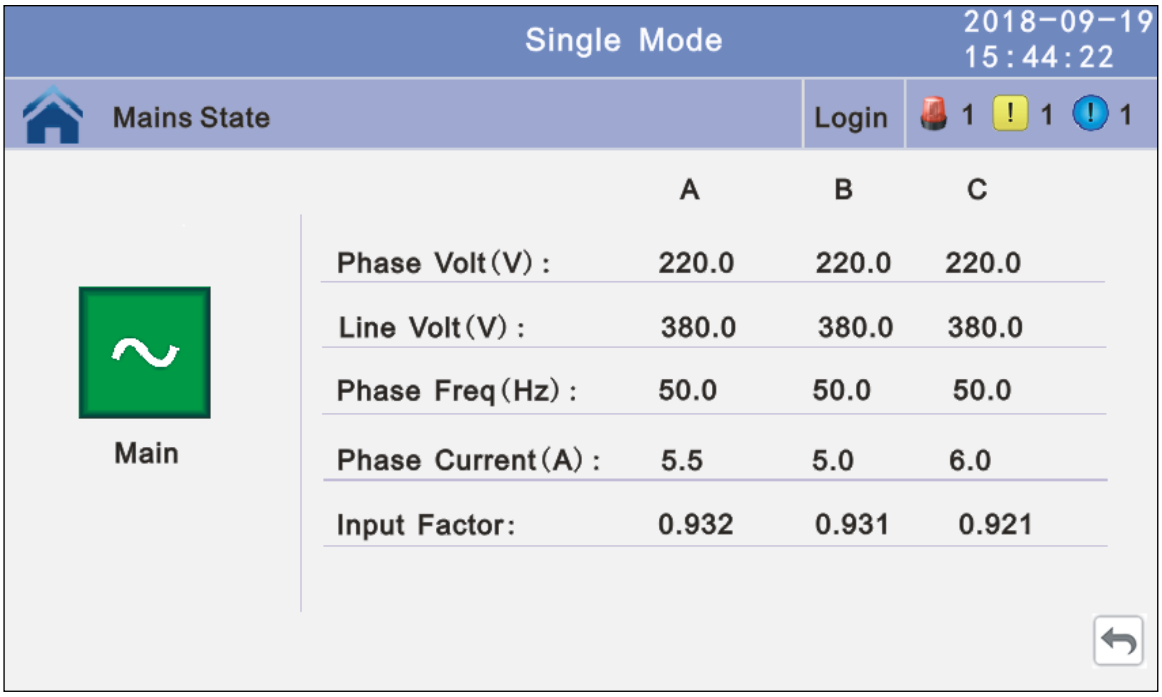

4.3.2.2 Bypass: Click the bypass block to enter the bypass data display window, click return to return to the previous window, click home page to return to the main page.

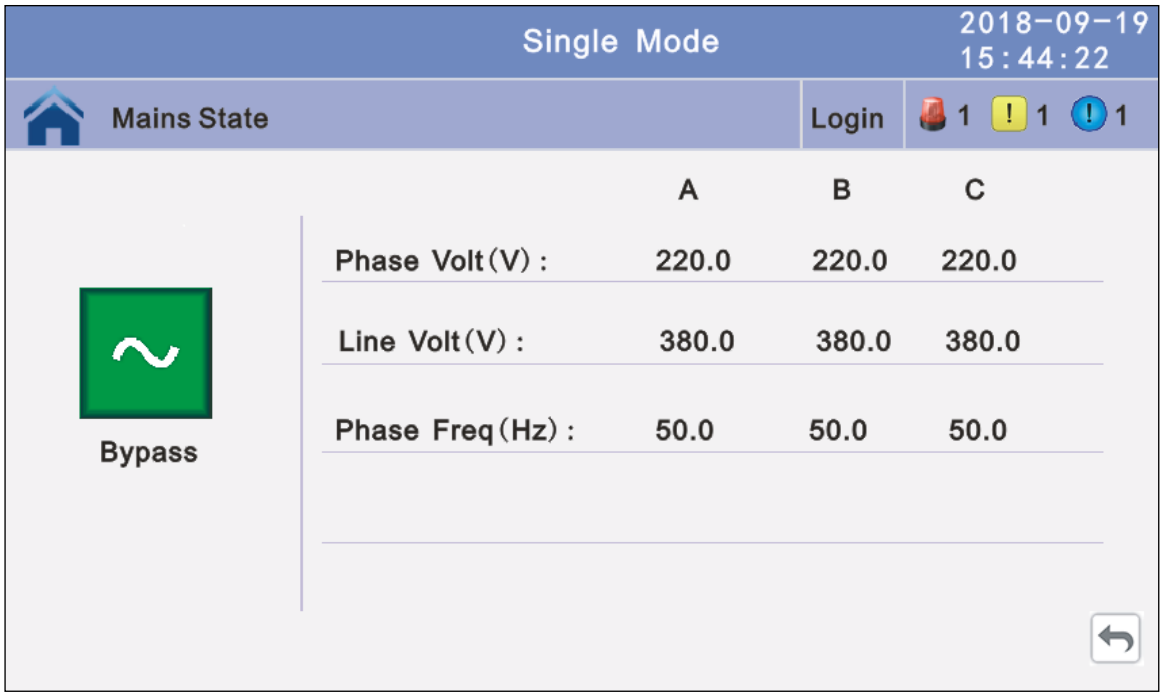

4.3.2.3 Output: Click the output block to enter the output data display window, click return to return to the previous window, click home page to return to the main page.

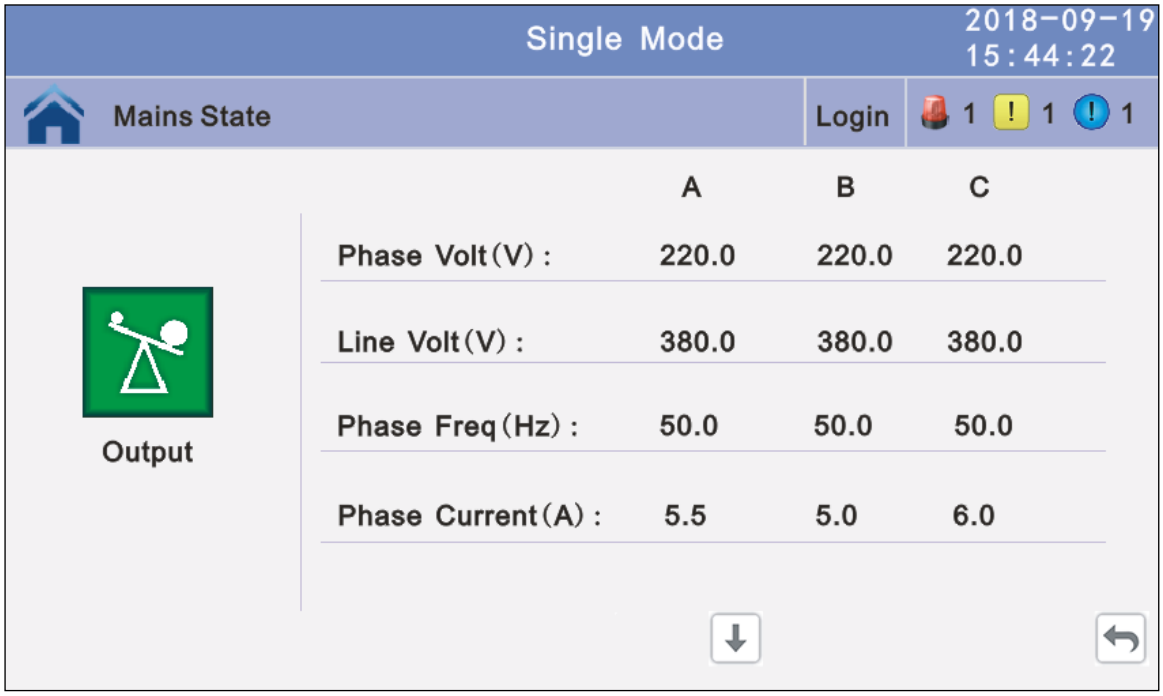

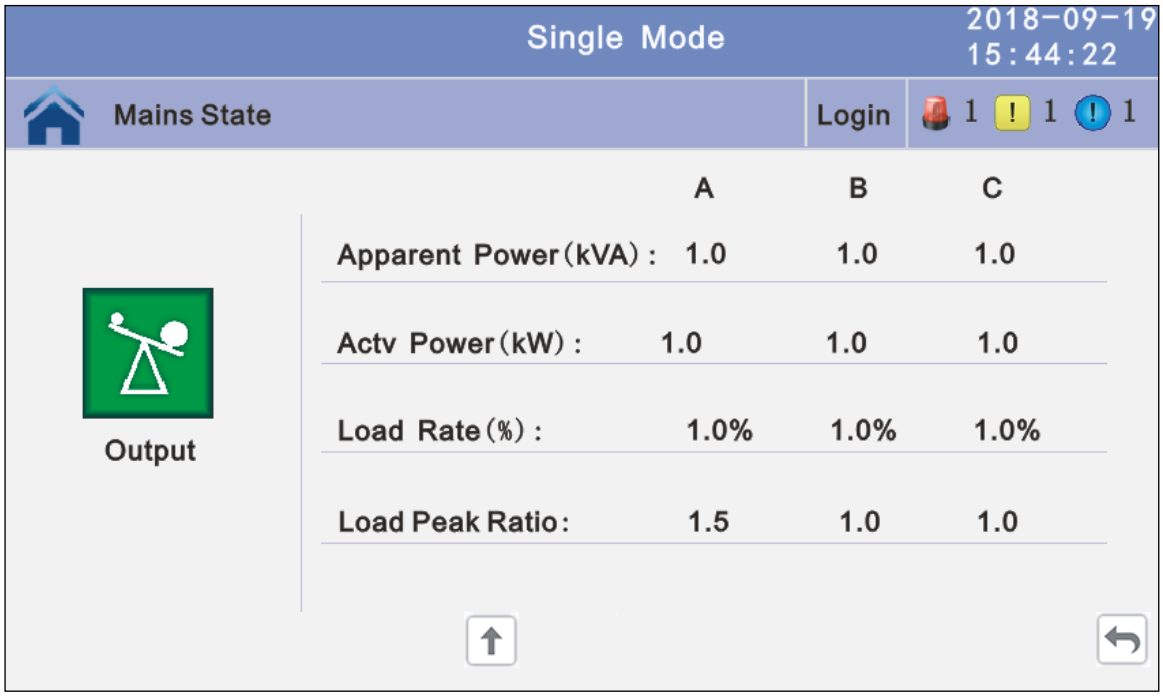

4.3.2.4 Battery: Click the battery block to enter the battery data display window, click return to return to the previous window, click home page to return to the main page.

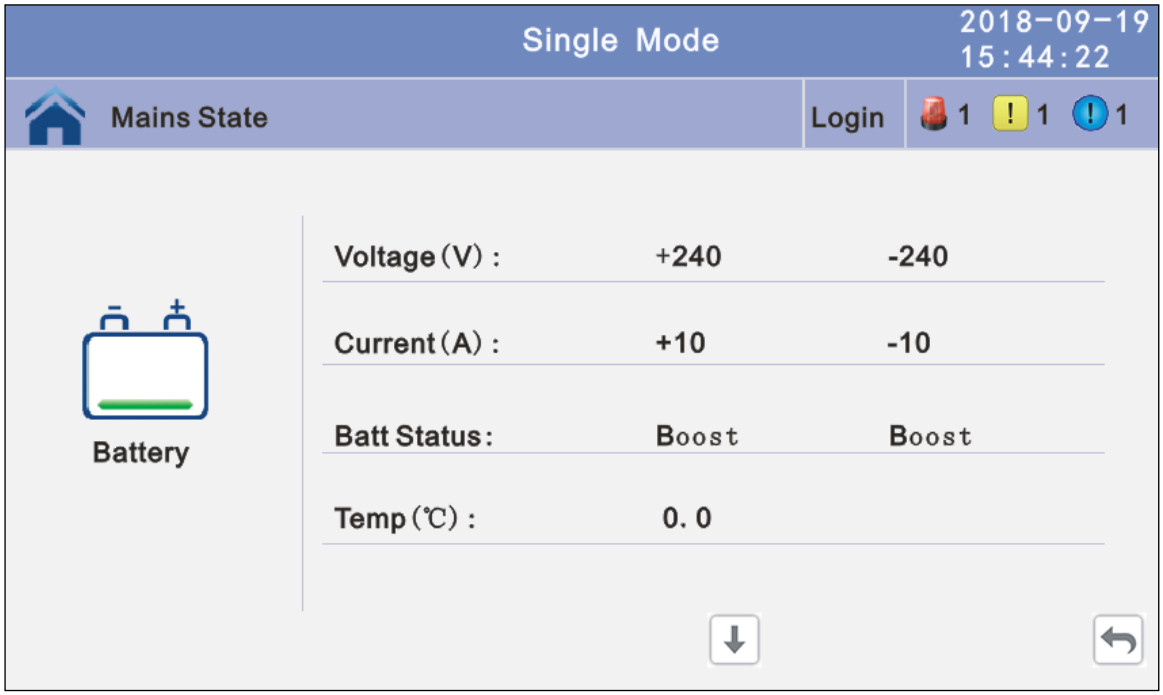

4.3.2.5 Status info: Click the status info block to enter the status data display window, click return to return to the previous window, click home page to return to the main page.

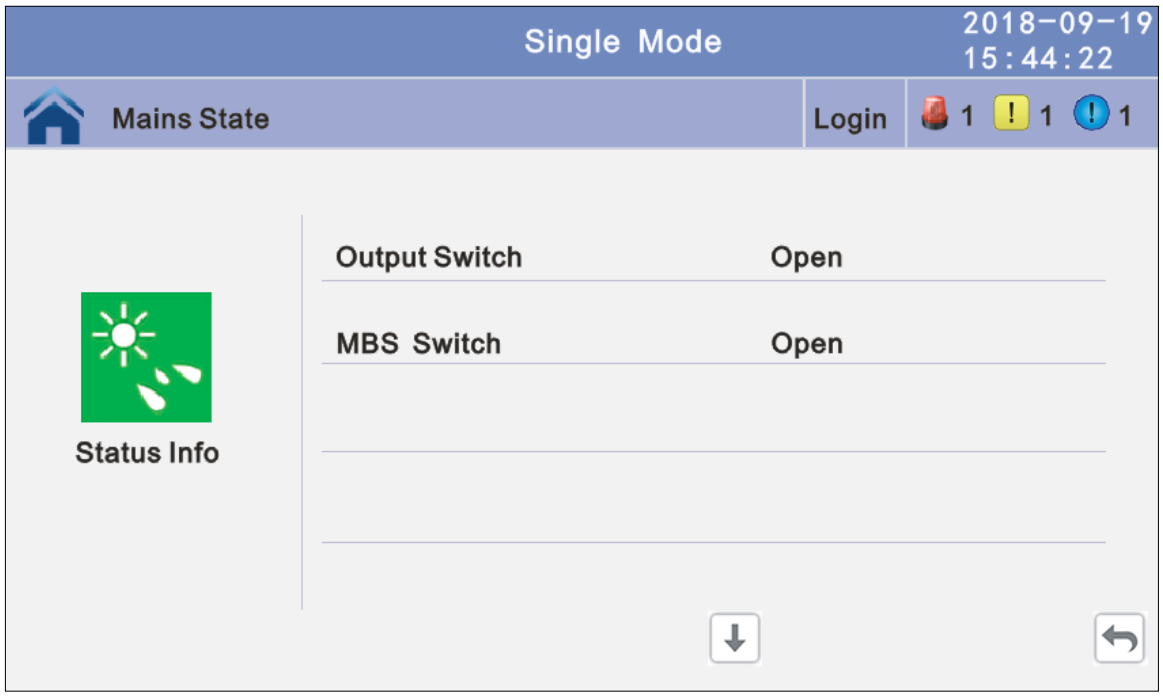

4.3.3 Alarm: View the alarm and history of the UPS, and open or close the buzzer.

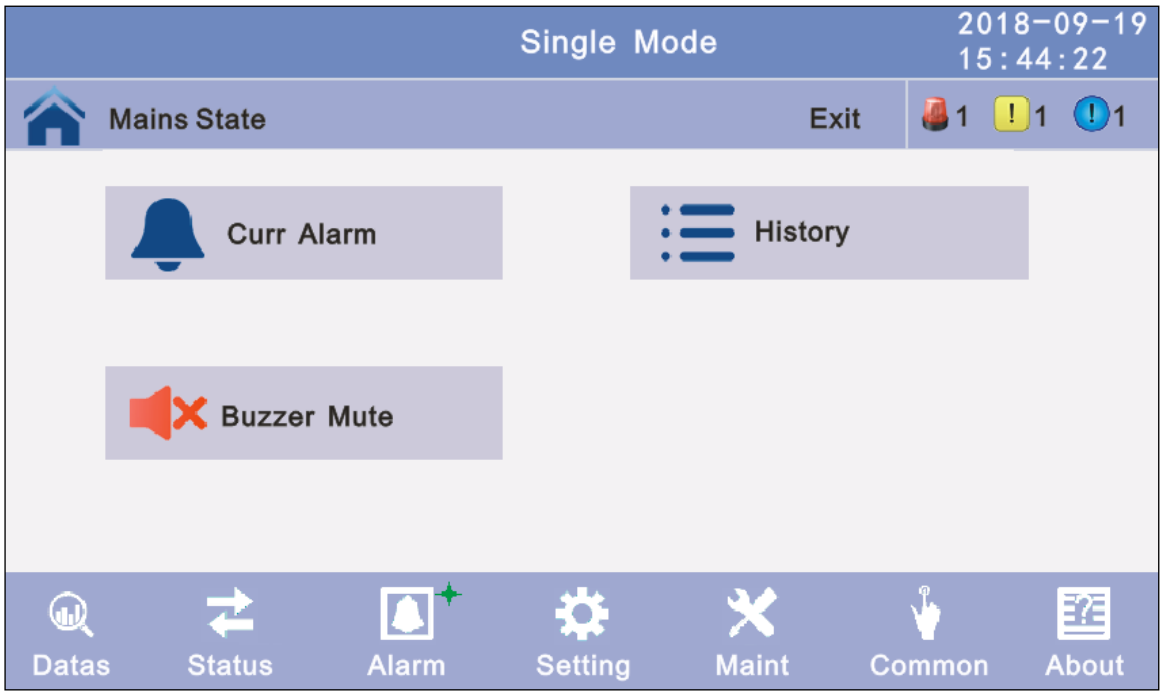

4.3.3.1 Curr Alarm: Click the curr alarm to enter the current alarm display window, click return to return to the previous window, click home page to return to the main page.

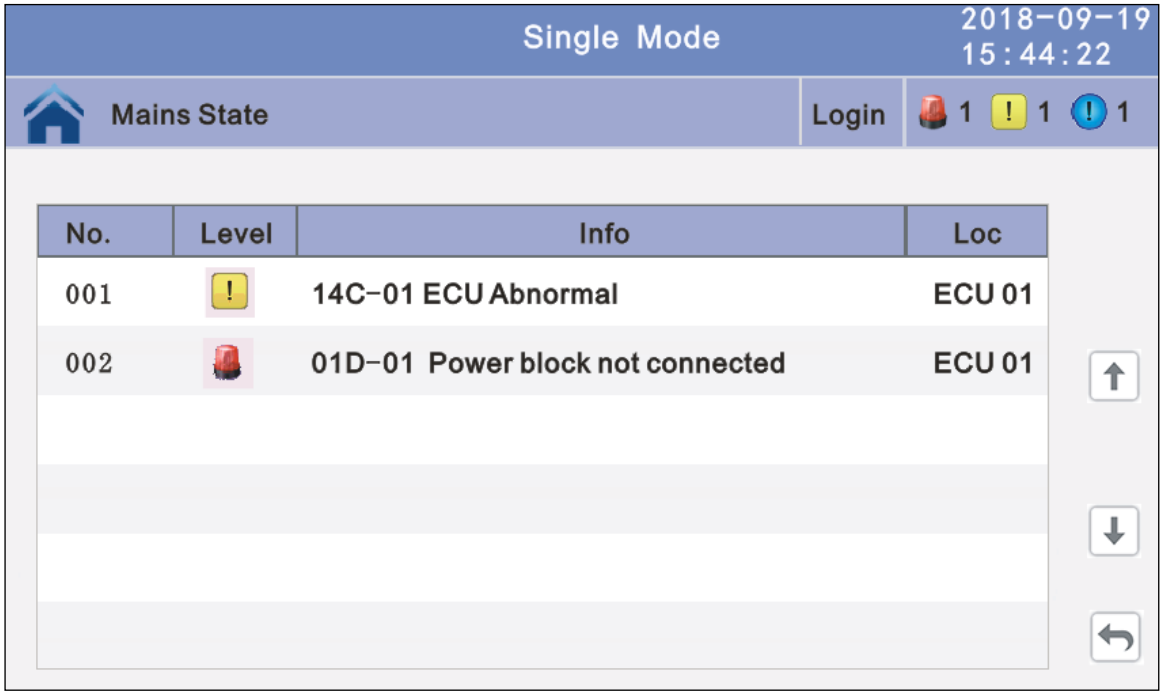

4.3.3.2 History: Click the history to enter the history recode display window, click return to return to the previous window, click home page to return to the main page.

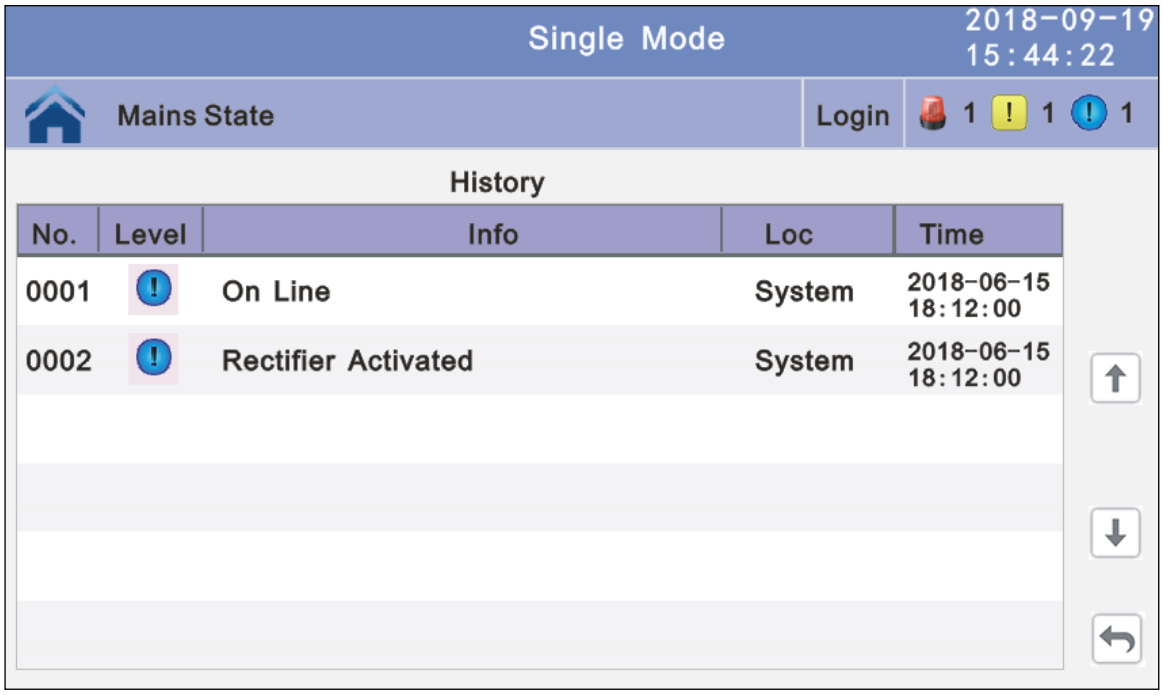

4.3.3.3 Buzzer: Click the buzzer mute then the buzzer will mute and the red block will change to green, if the buzzer is on, then click the block buzzer will on and the block will change to red. click return to return to the previous window, click home page to return to the main page.

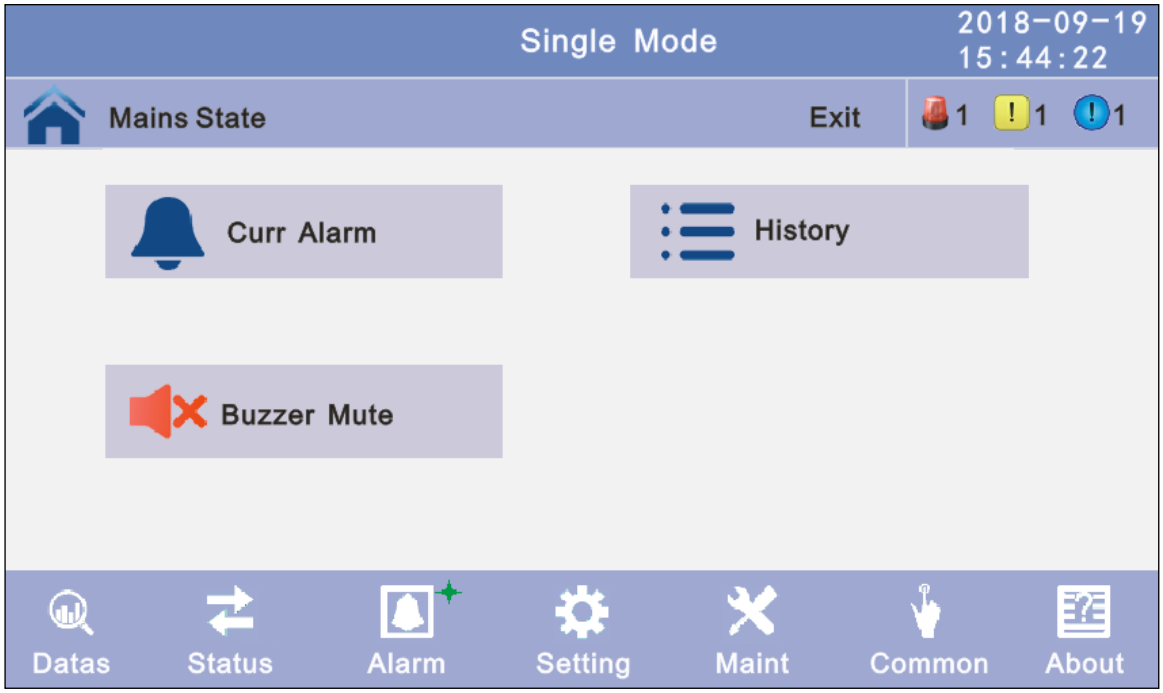

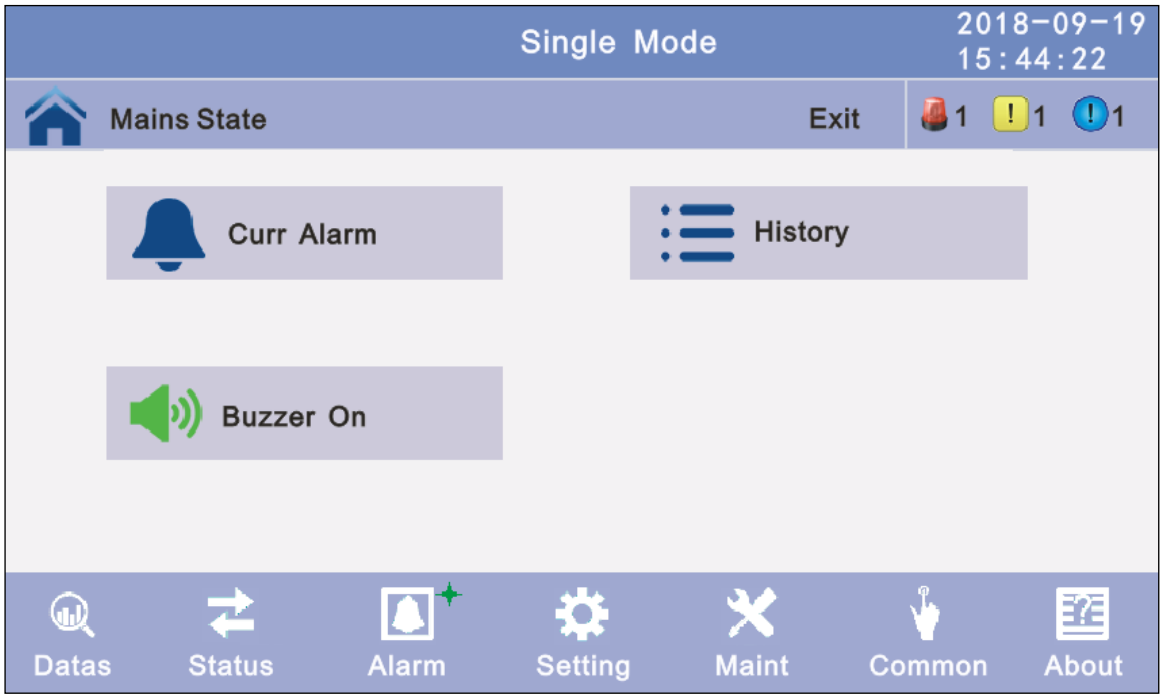

4.3.4 Setting: There are two levels, the basic setting for user settings, advanced setting for technical personnel, please contact the relevant technical personnel to enter advanced settings.

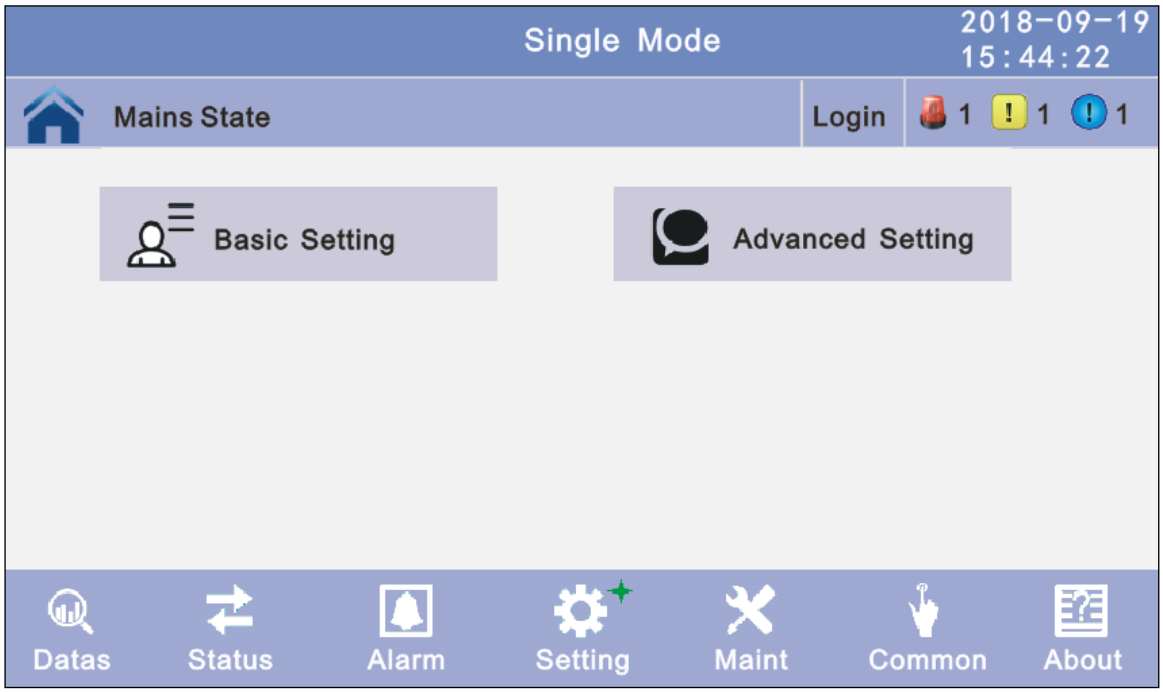

4.3.4.1 Basic Setting: Click basic setting, enter by input the correct password. The user password is “111111”.

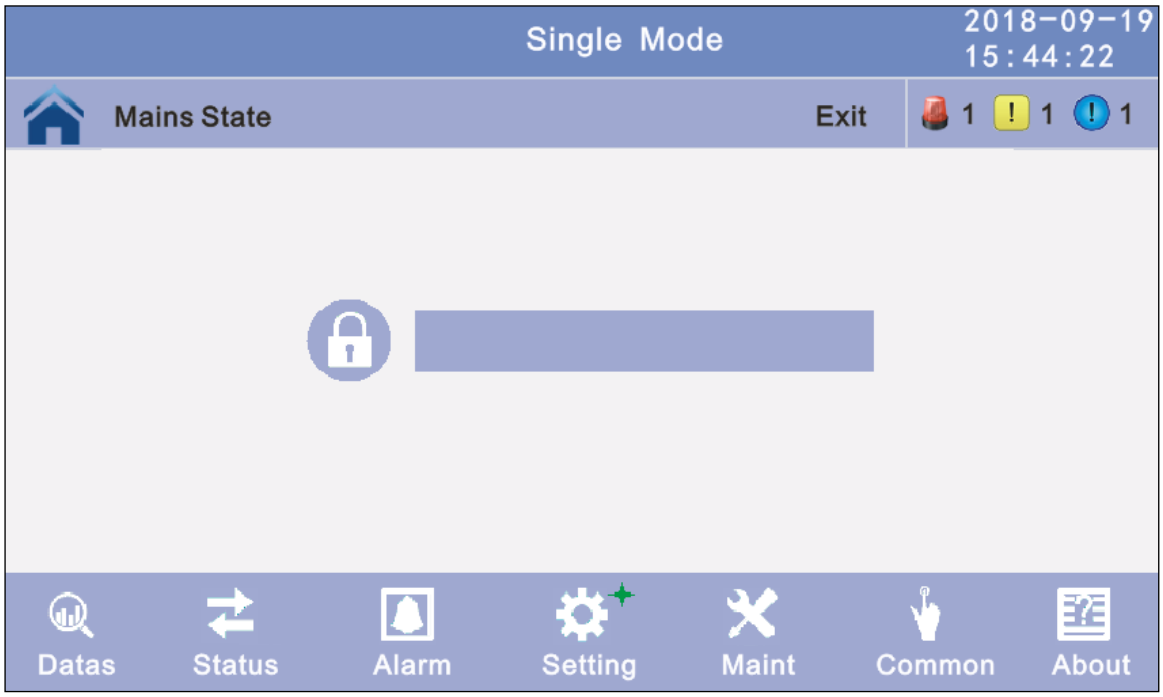

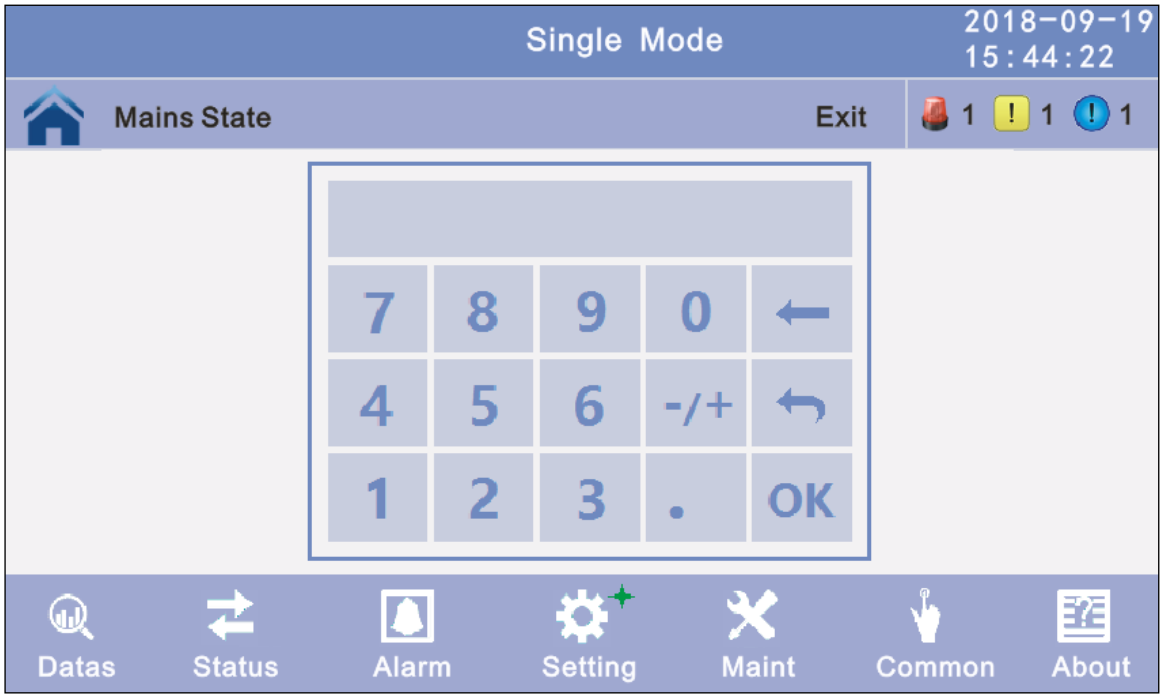

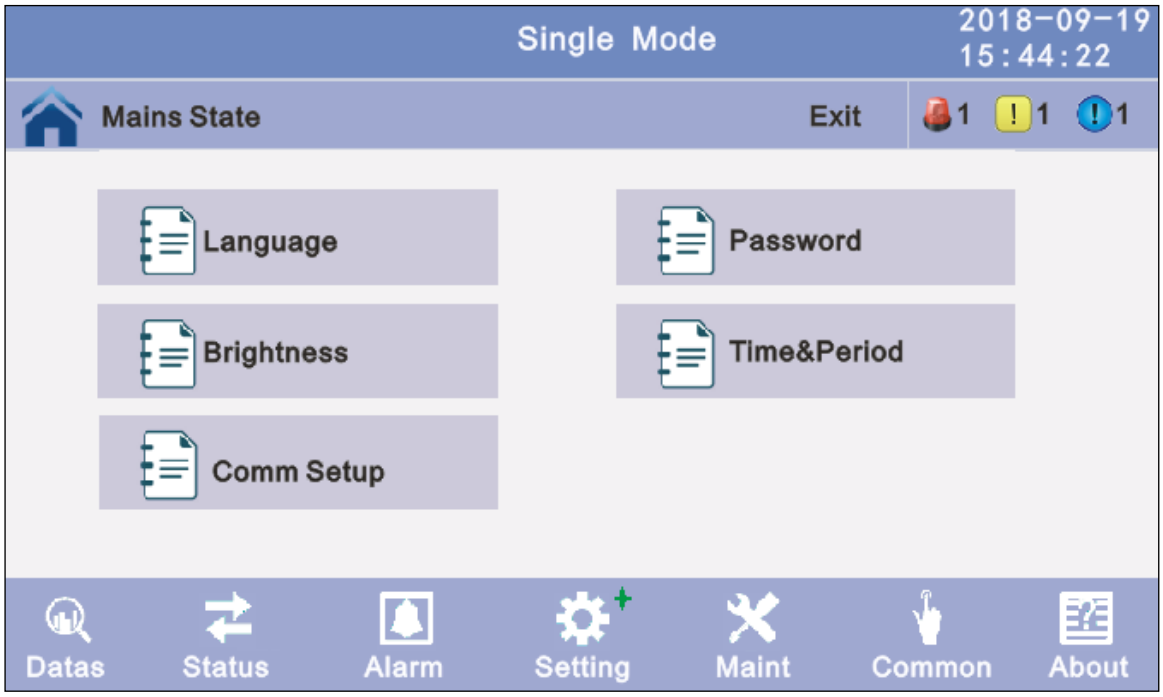

4.3.4.1.1 Language: Click the language block witch you want and click the save config block to save. click return to return to the previous window, click home page to return to the main page.

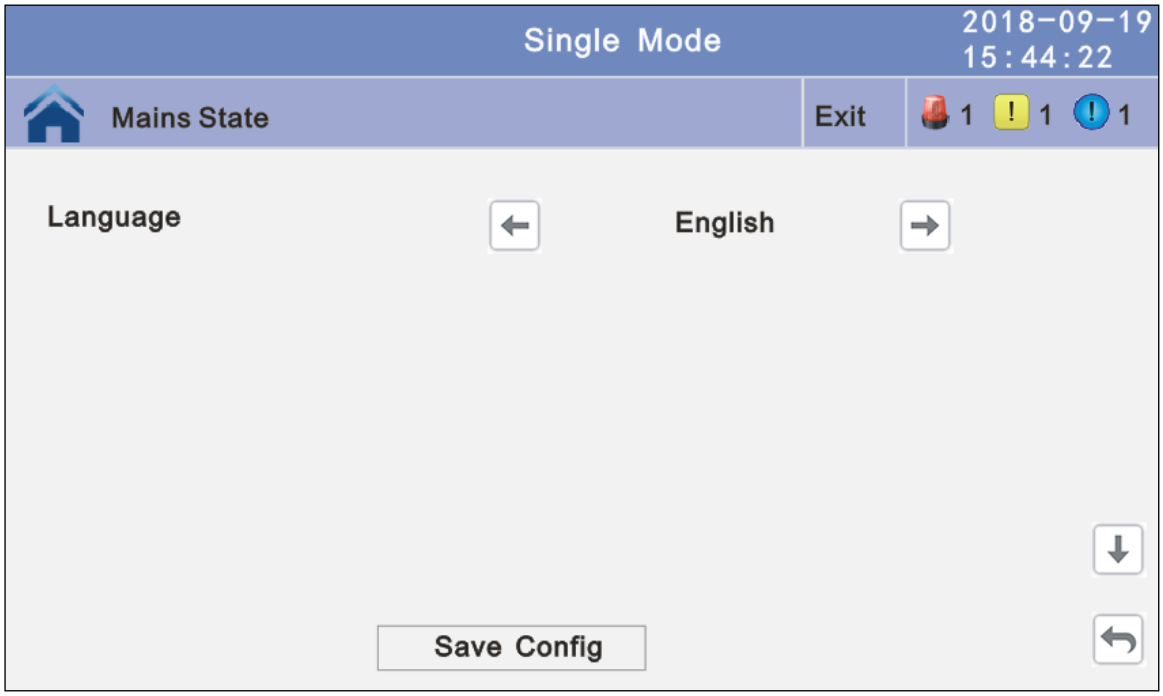

4.3.4.1.2 Password: Click password block enter user password setting page, input old password and new password, then click save confir to save the change. Password format is six number. click return to return to the previous window, click home page to return to the main page.

Password lock time: When LCD is not touched, it needs to re login when the setting value is set, click left or right block to change the value.

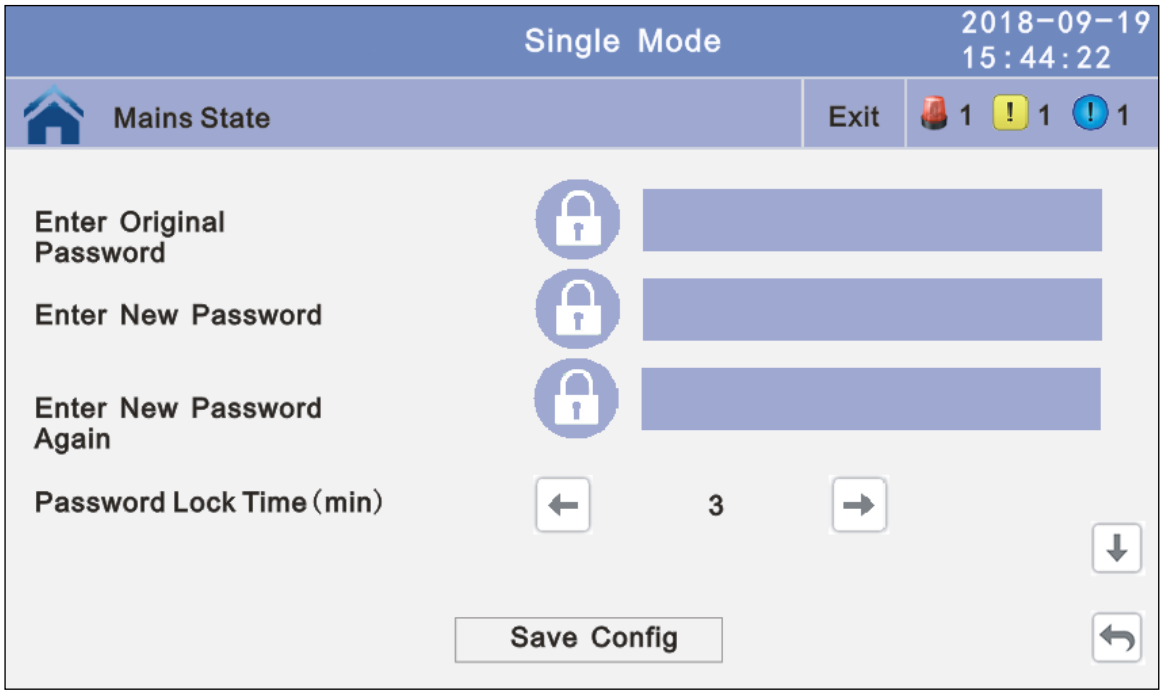

4.3.4.1.3 BrighNess and Backlight time: Click the block to change value. click return to return to the previous window, click home page to return to the main page.

BrighNess: Click the text to input new value and click the save config block to save. Value range is 1~63, default value is 63.Click return to return to the previous window, click home page to return to the main page.

Backlight time: LCD backlight delay time, click the text to input new value and click save config block to save. Value range is 1~255, default value is 60.Click return to return to the previous window, click home page to return to the main page.

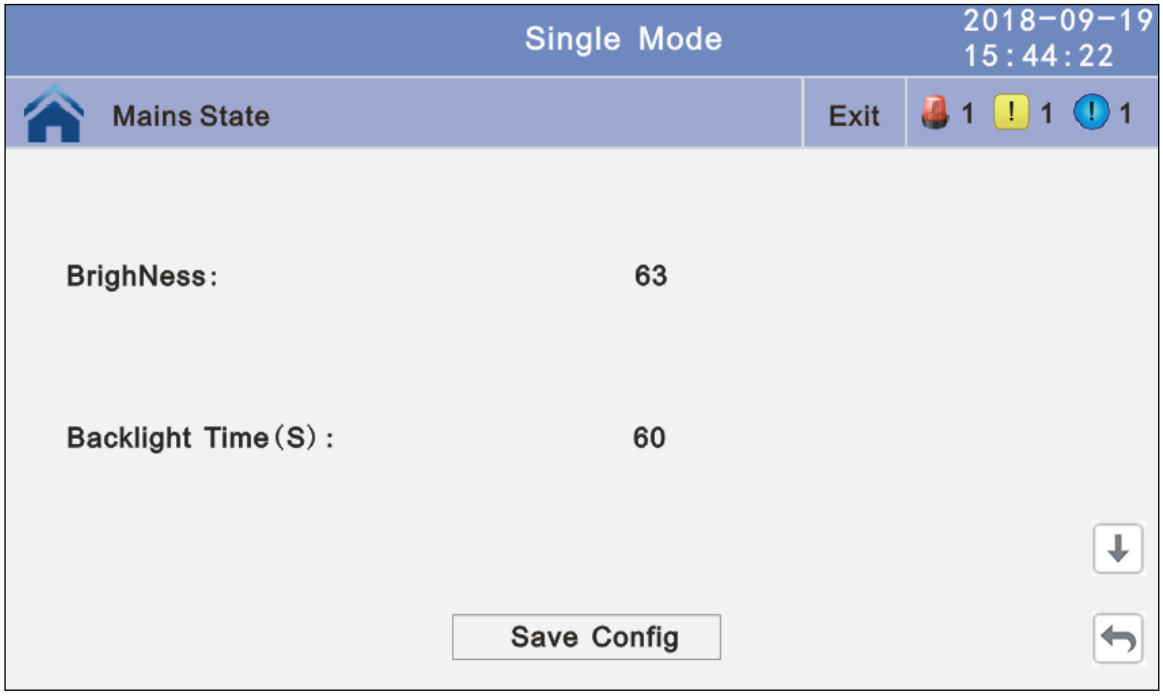

4.3.4.1.4 Date and time setting: Click the text to select other value or input new value and click save config block to save. Click return to return to the previous window, click home page to return to the main page.

Date: current date

Time: current time

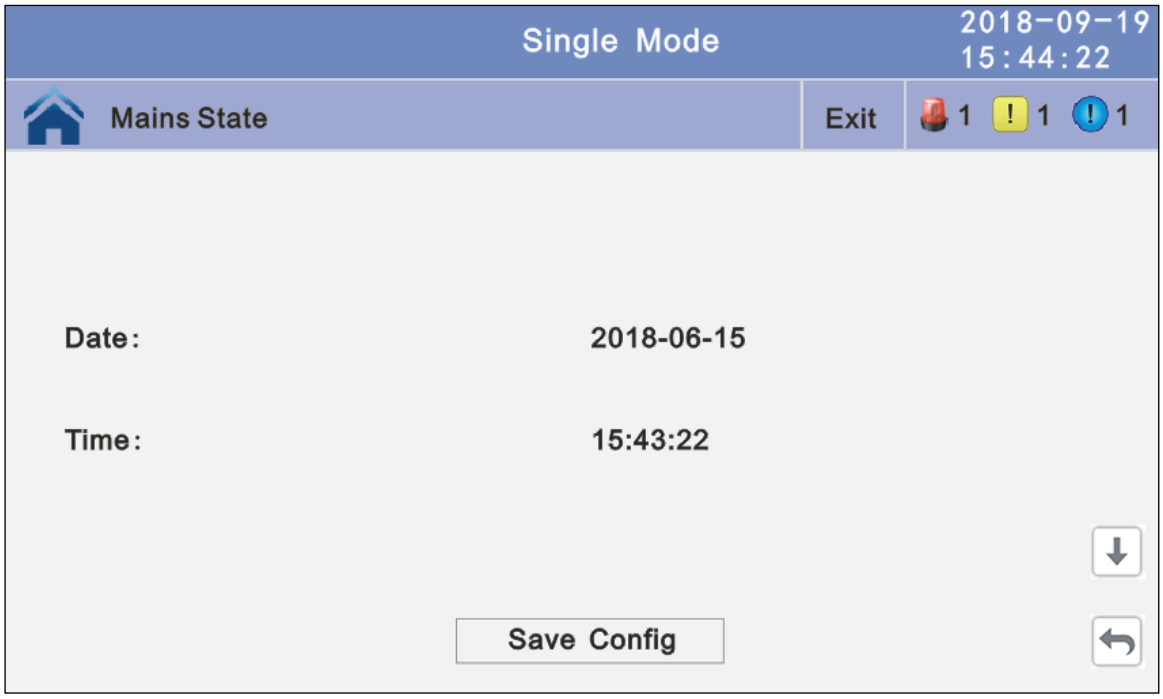

4.3.4.1.5 Communication setting: Click the text to select other value or input new value and click save config block to save. Click return to return to the previous window, click home page to return to the main page.

Rs485 address: UPS communication ID, address range is 1~15, default is 1

Rs485 Baud Rate: baud rate: 2400, 4800, 9600, 14400, 19200, default is 9600

4.3.4.2 Advanced Setting: Click advanced setting, enter by input the correct password. The user password is “191210”.

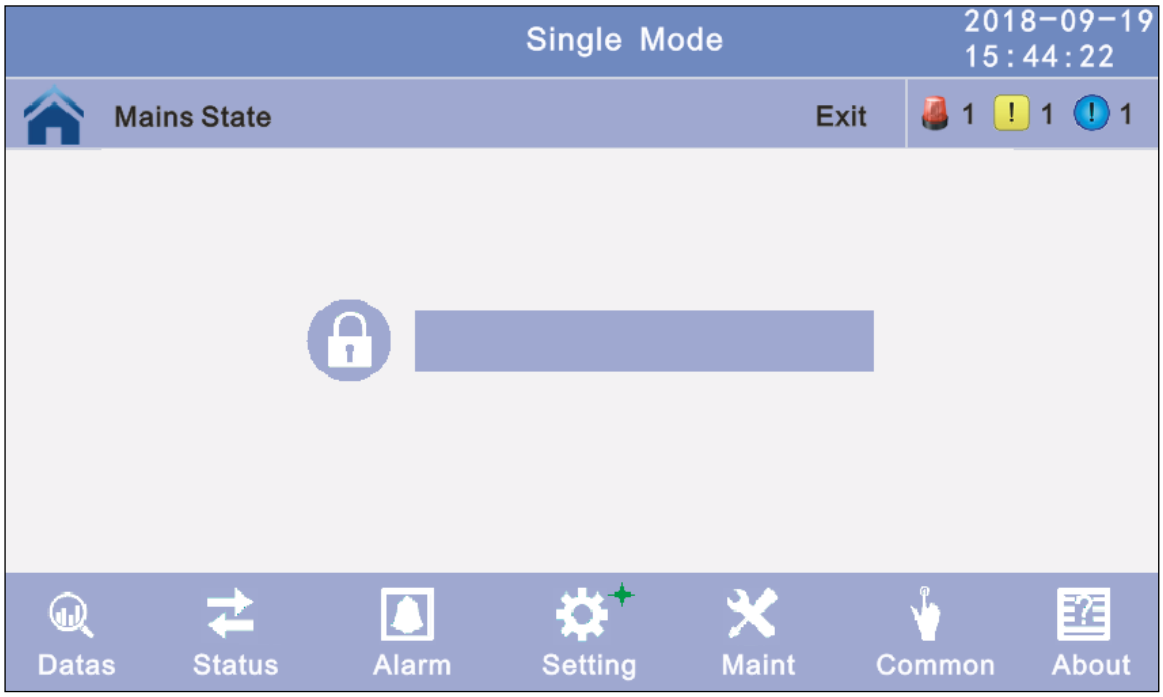

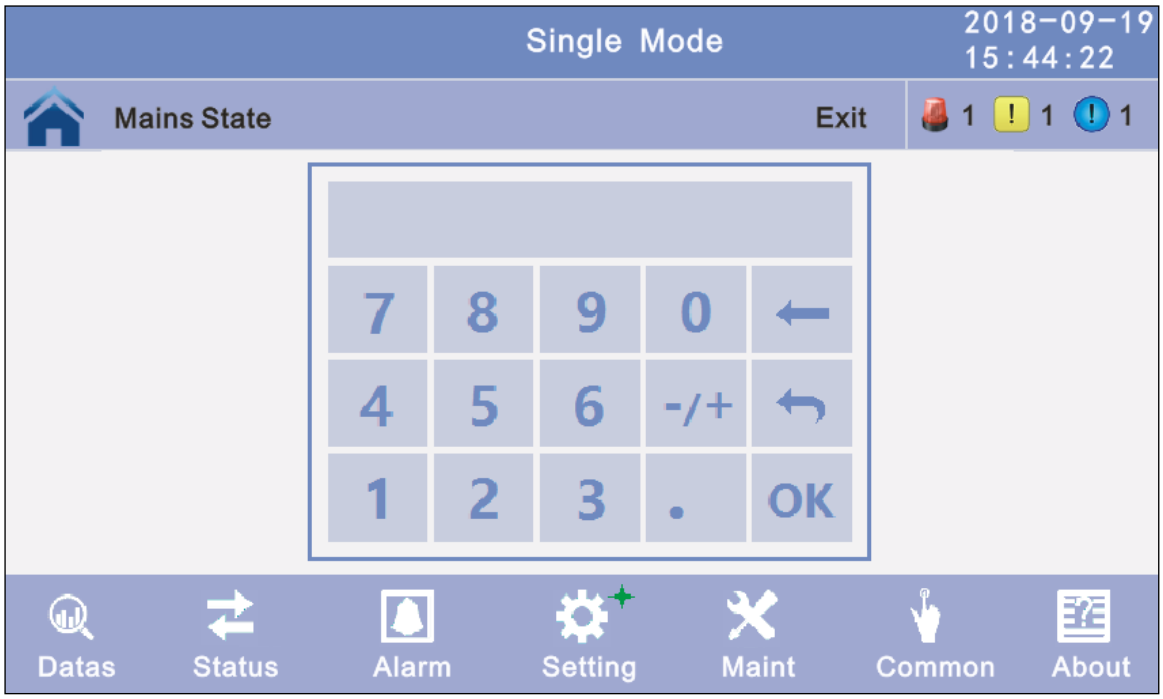

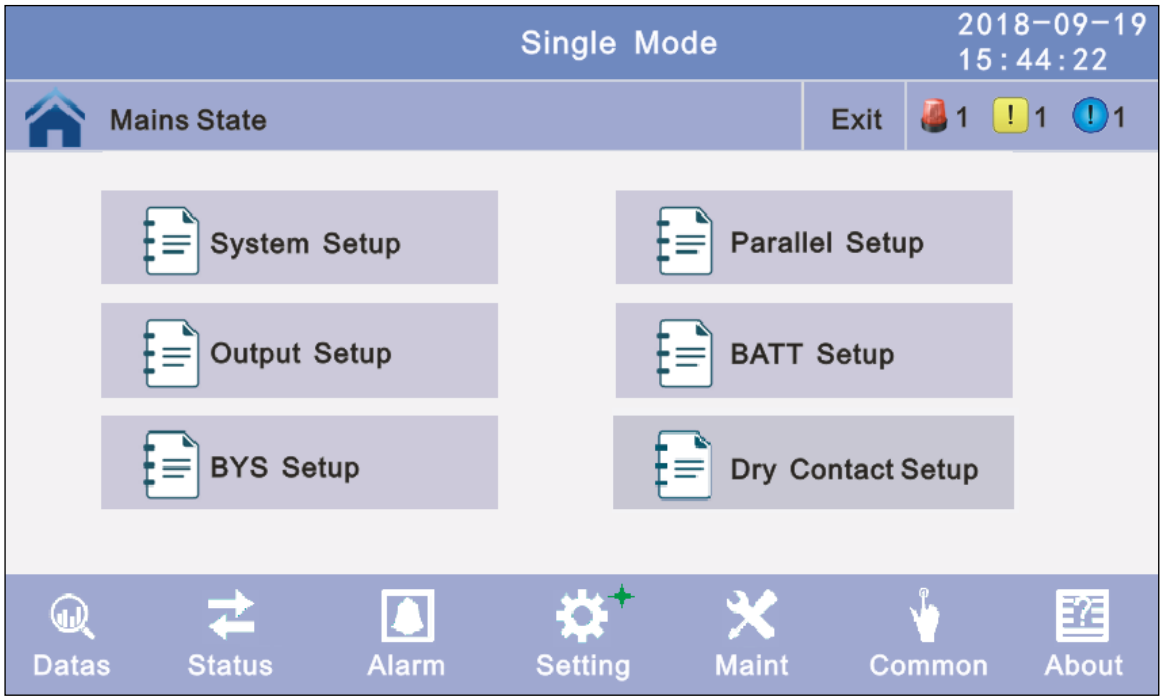

4.3.4.2.1 System setup: Click the text to select other value or input new value and click save config block to save. Click return to return to the previous window, click home page to return to the main page.

Working Mode: Select the work mode of UPS, work mode: Single mode, Parallel mode, ECO mode.

Auto Turn-on: Select the UPS start logic, Enable: UPS start inverter output automatic, Disable: No output.

Aging Load Rate: The value can be 18~100%, default value: 60%

Rreq Conv Mode: Frequency conversion mode, enable: output frequency set 50Hz or 60Hz, input frequency is 60Hz or 50Hz, UPS no alarm not battery and bypass abnormal. Default is Disable.

LBS mode: setting value: LBS disable, LBS master, LBS slave. Default is LBS disable.

Float Temp. Compen.: temperature sensor compensation switch, when need to connect battery temperature sensor, please change the value to enable.

Temp Sensor Select: temperature sensor type select. Has tow types: NTC and RS485. NTC for single and short distance. Rs485 for multiple and far distance.

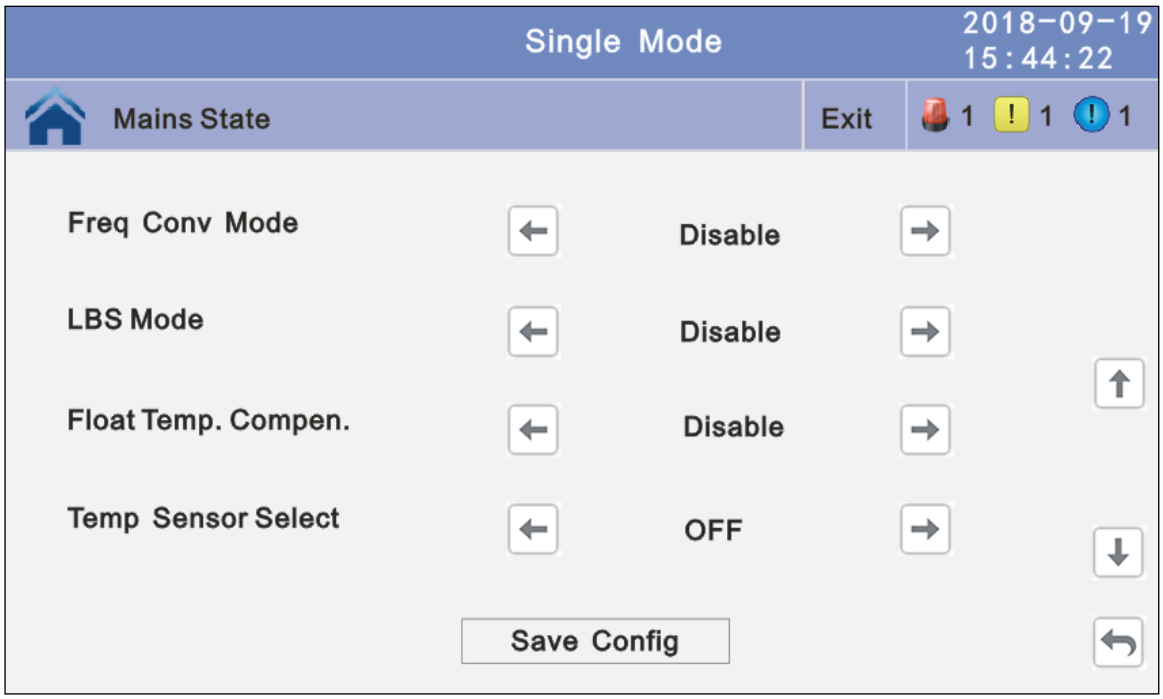

Inter Power Walk in: this is enable the UPS to control the interval that each rack transfers from battery mode to normal mode, which reduces the impact on the generator or power grid. The value can be 0~200, default value is 10.

Inter sleep mode: when load less than the software setting value, same parallel rack will turn to standby mode and if the load more than the setting value some rack will turn to inverter mode after setting the sleep mode enable. Default value is disable.

Parallel ID: Parallel operation ID, must modify the ID after set work mode to parallel mode. The value can be 1~6, default value is 1.

Cabinet Paral Basic Units: Parallel cabinet number, must modify the tatal parallel cabinet number after set work mode to parallel mode. The value can be 2~6, default value is 2.

Cabinet Paral Redunt Units: Parallel redundancy cabinet number, can modify the redundancy cabinet number after set work mode to parallel mode. The value can be 0~5, default value is 0.

Output Freq: Output frequency, The value can be 50Hz or 60Hz.

Output Volt Level: Output voltage level, The value can be 220V, 230V, 240V.

Inverter Volt Adjust: Inverter voltage regulated, The value can be -5%~0~+5%, step is 0.5%, default value: 0.

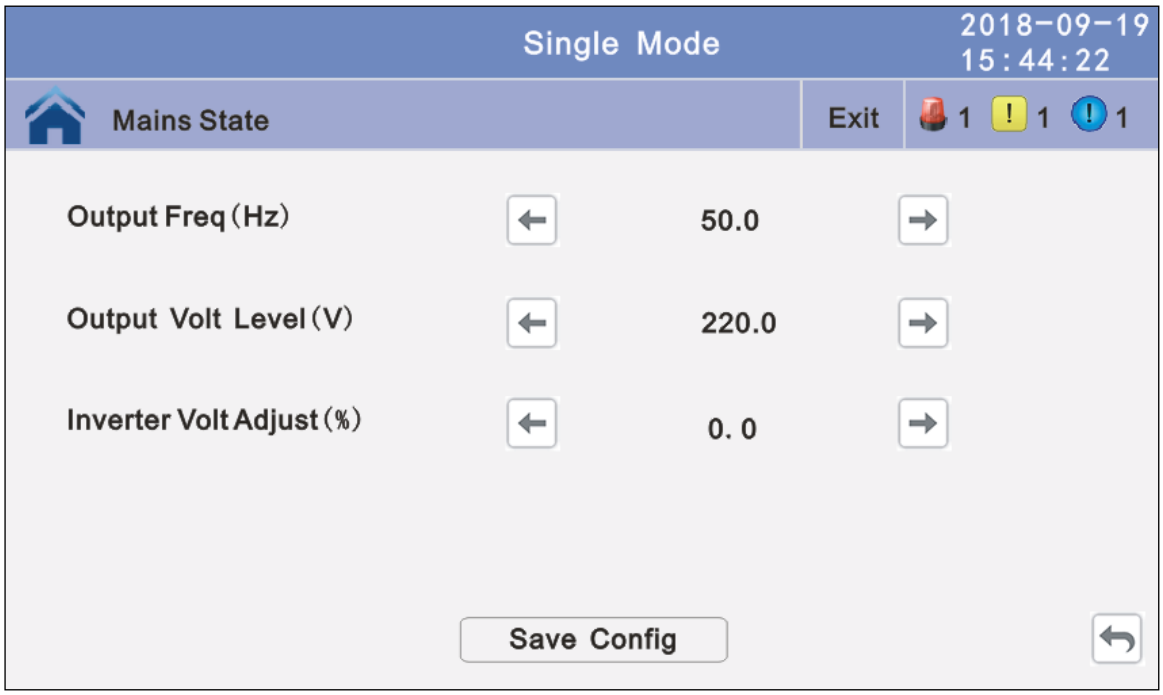

Battery Group: Must modify the number to actual configuration, The value can be 1~8, default value is 1.

Battery number: Must modify the number to actual configuration, The value can be 30~50, default value is 30.

Single Battery Capability: Must modify the value to actual configuration, The value can be 7~2000.

Boost/Float conversion: boost charge and float charge alternate time, The value can be 0~20.

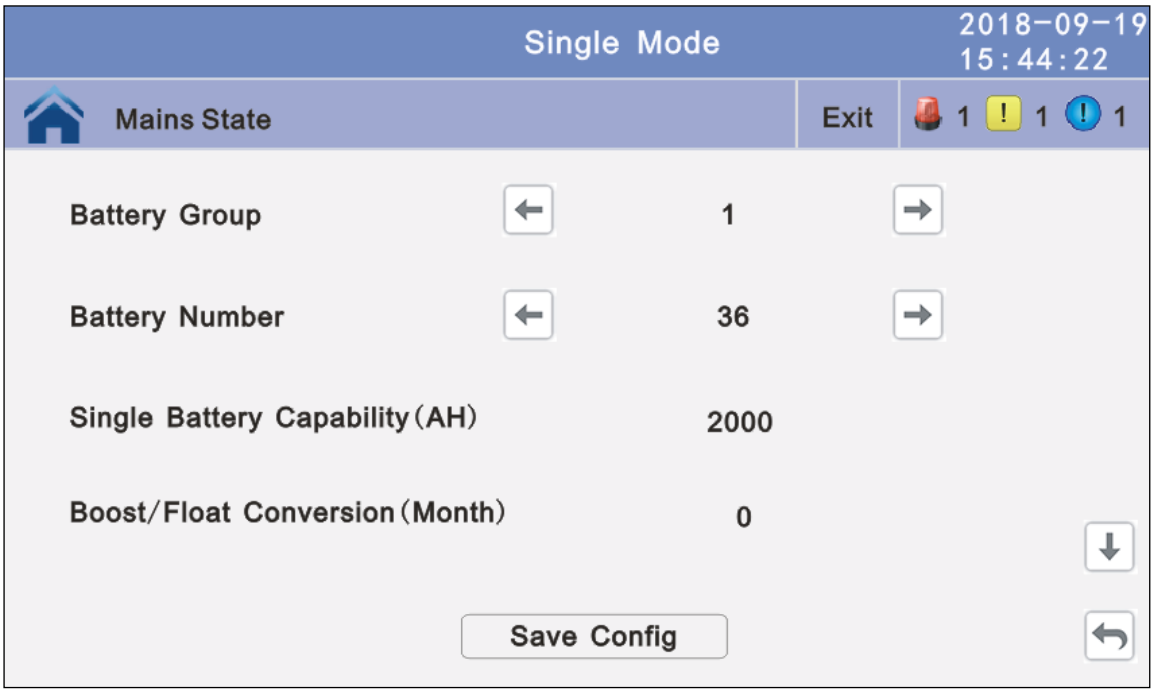

Chg.cur.limiting coef.: The charging current limit is a multiple of the battery capacity. The value can be 0.05~0.15, and is 0.1 by default.

Cell float voltage: The float voltage value can be 2.23~2.30 V/cell, and is 2.25 V/cell by default.

Cell boost voltage: The battery equalized voltage value can be 2.30~2.40 V/cell, and is 2.30 V/cell by default.

Aver charging Duration: boost charge time limit, the value can be 1~999min , and is 240 by default.

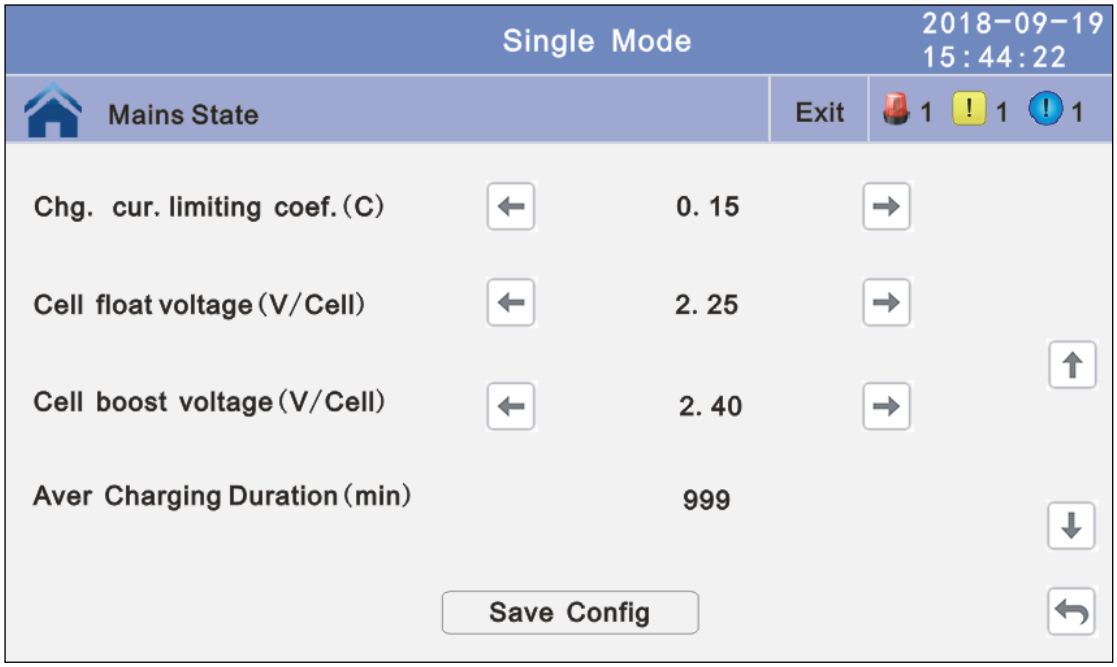

EOD Battery Volt: End of discharge voltage. The value can be 1.60~1.90, and is 1.80 by default.

Float Temp Compen Coeff: modify the voltage of compensation after enable the switch. the value can be 0.001~0.007/cell, and is 0.003 by default.

Boost Charge Setting: Boost charge disable or enable, and is enable by default.

No Battery Warning: can be no warning when no batter after set disable, and is enable by default.

Bypass Volt Prot Lower Limit: When the difference between the bypass voltage and the rated voltage exceeds the lower threshold for the bypass voltage, the system determines that the bypass voltage is abnormal and that the bypass is unavailable. The value can be -10%, -15%, -20%, -30%, -45%,. The default value is -45%.

Bypass Volt Prot Limit: When the difference between the bypass voltage and the rated voltage exceeds the upper threshold for the bypass voltage, the system determines that the bypass voltage is not normal and that the bypass is unavailable.

NOTE:

When the voltage level is 380 V, the value range is 10%, 15%, 20%, and 25% (default).

When the voltage level is 400 V, the value range is 10%, 15%, and 20% (default).

When the voltage level is 415 V, the value range is 10% and 15% (default).

Bypass Freq Tracking Range: When the difference between the bypass input frequency and the rated frequency is greater than this value, the system determines that the bypass frequency is not normal, and that the bypass is unavailable. The value range is 1%, 2%, 4%, 5%, 10%(default).

Bypass rate tracking rate: Inverter frequency tracking to bypass frequency rate. The value range is 0.5~2, and is 1 by default.

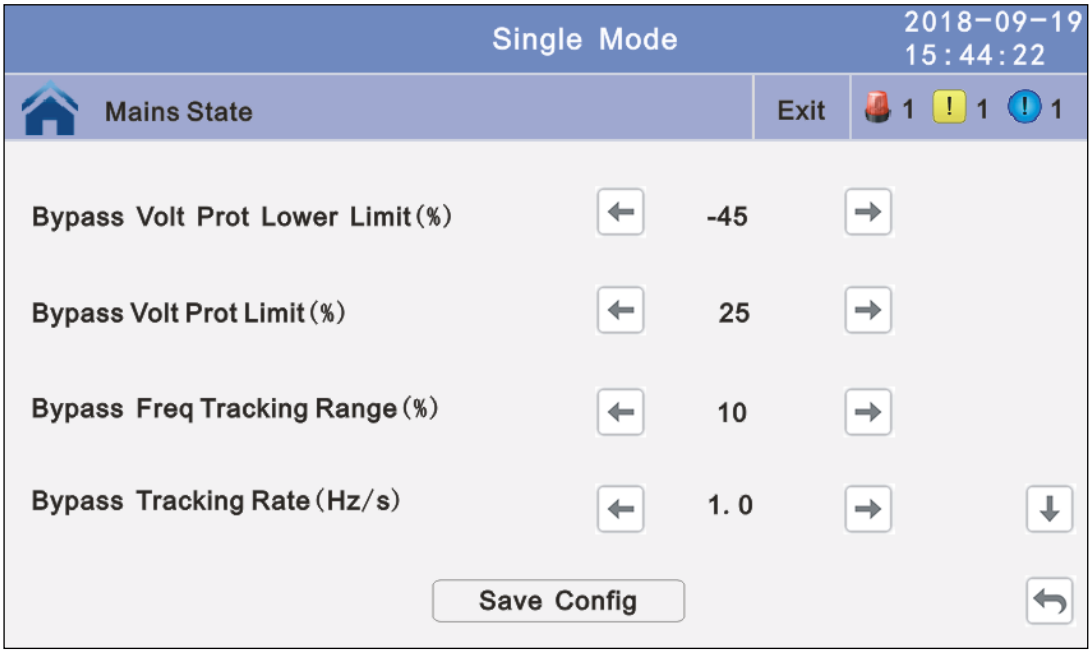

Power Supply upon bypass Over Temp: Specifies whether to start bypass mode when over temperature occurs. The default value is Enable.

Bypass Switches Limit: Cross currents occur during the transfer between bypass mode and normal mode, which impacts the system. This parameter specifies the number of transfers between bypass mode and normal mode within 1 hour, which ensures system security. The value can be 3 to 10, and is 10 by default.

EPO transfers to BYP: Specifies whether to start bypass mode when EPO occurs. The default value is Enable.

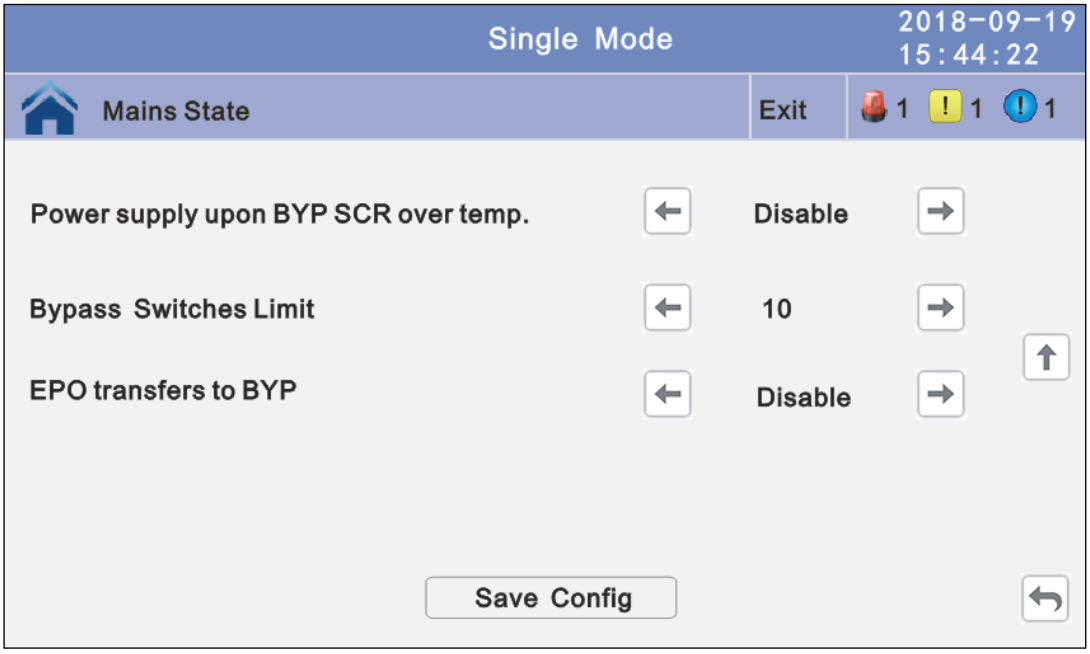

Battery Abnormal BCB trip(DRV): Enable or disable BCB trip single output. The default value is Disable.

Bypass Feedback: Enable or disable bypass feedback output. The default value is Disable.

External Maint. breaker: Enable or disable external maintenance breaker connection detection. The default value is Disable.

Battery Switch(BAT): Enable or disable battery breaker connection detection. The default value is Disable.

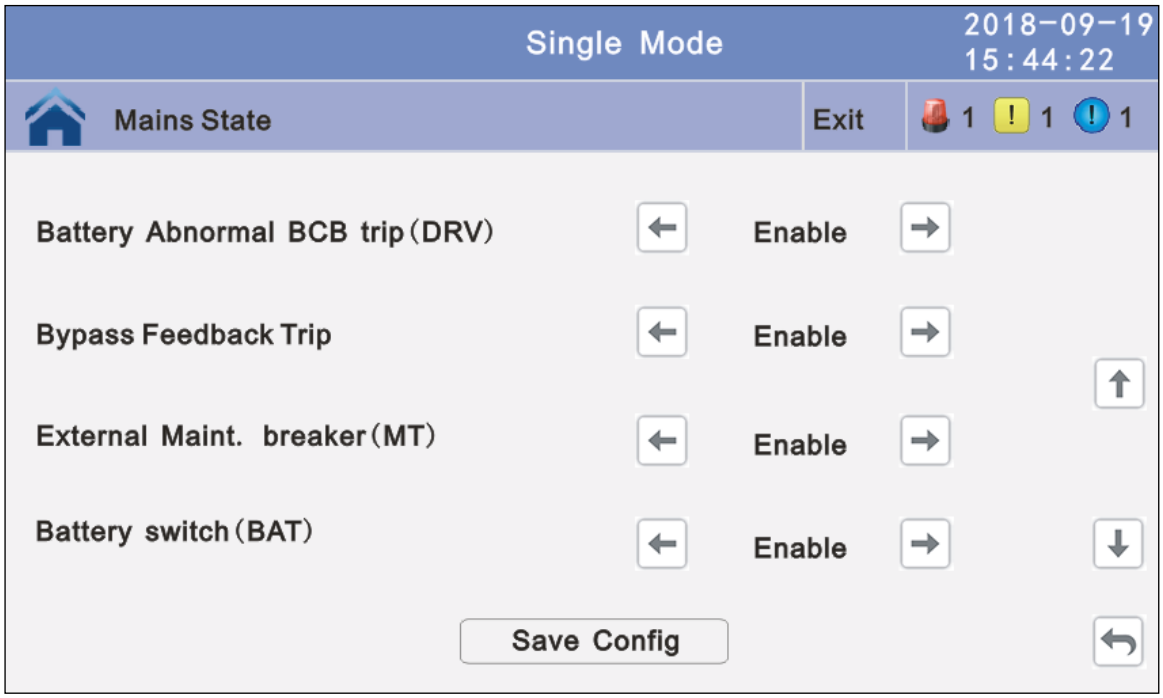

4.3.5 Maint: Software update, Touch correction, history download and battery self-test.

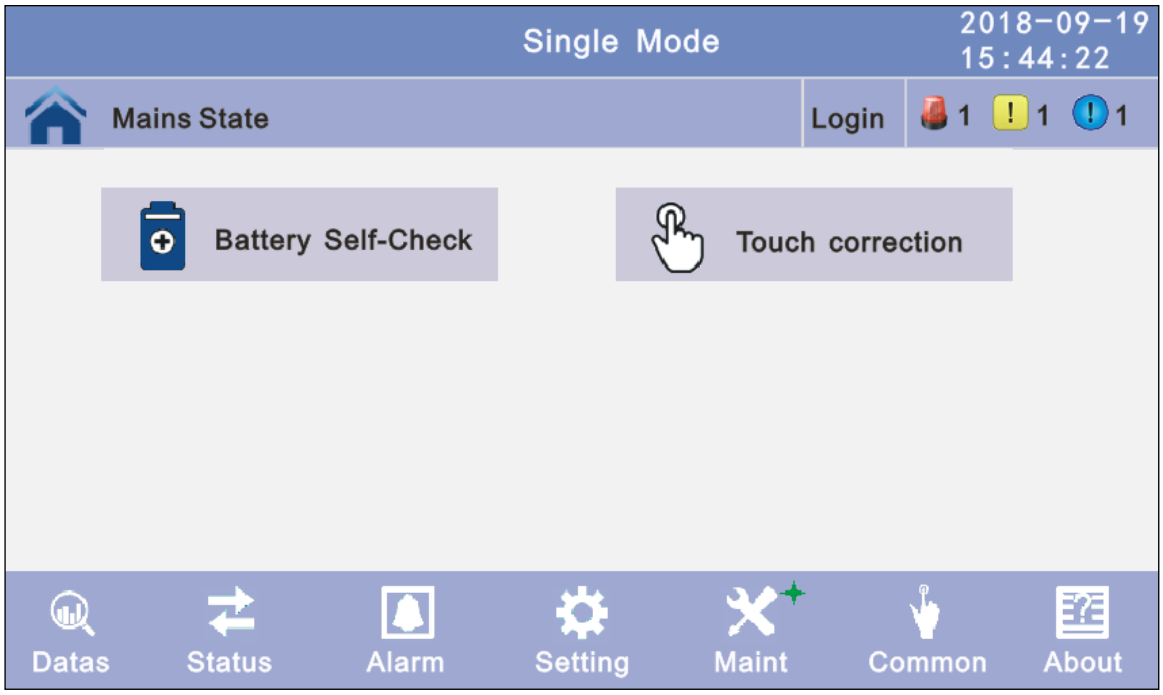

4.3.5.1 Battery Self-Check: can select check by Timing Daily, Timing Weekly, Cycle mode. The default value is Timing Self-Check Close.

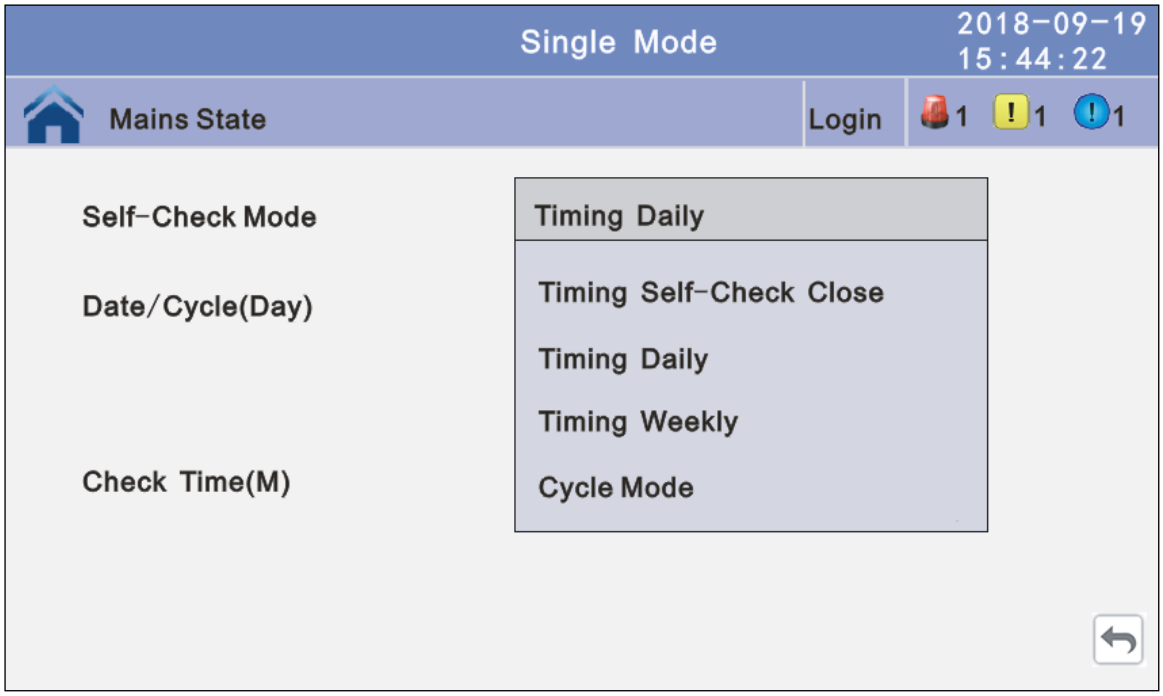

4.3.5.2.1 Timing Daily: modify the check date, time and check time (10S (default), 10min, EOD).

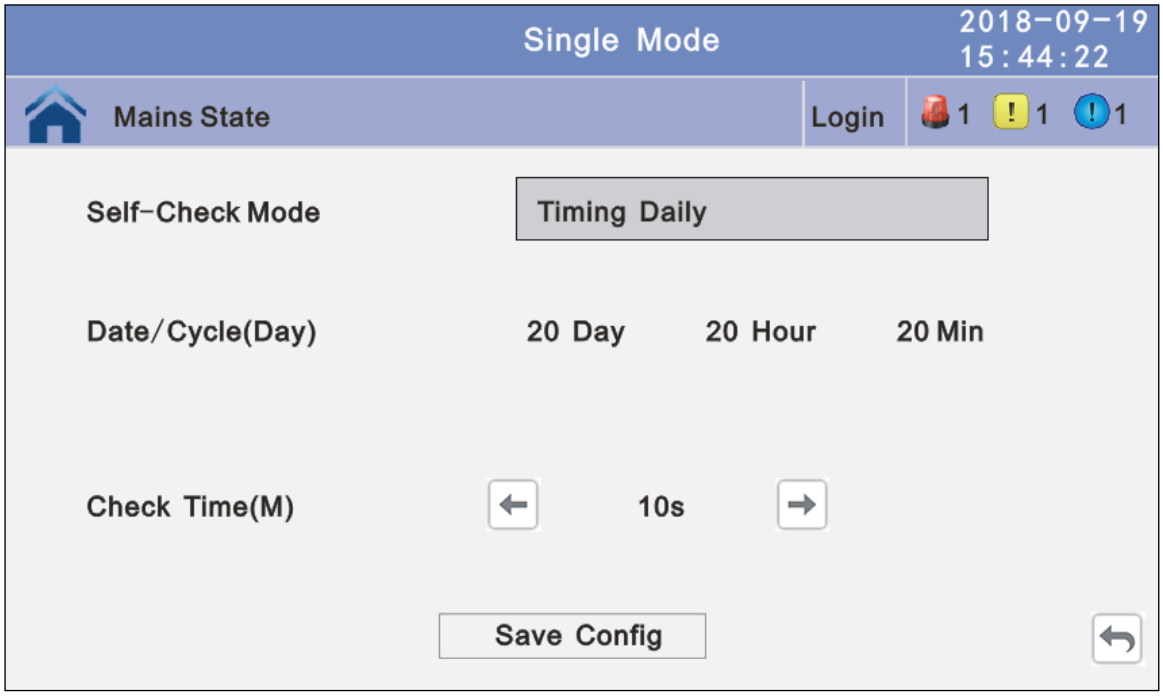

4.3.5.2.2 Timing Weekly: modify the check date, time and check time (10S (default), 10min, EOD).

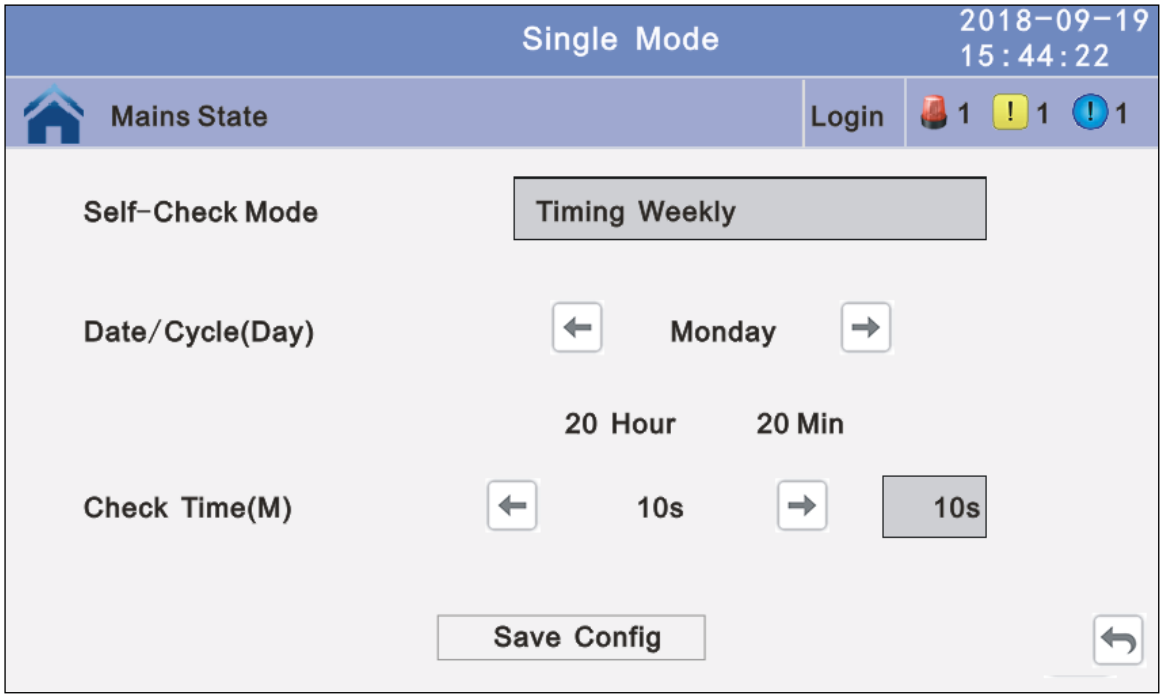

4.3.5.2.3 Timing Cycle mode: modify the cycle date and check time (10S (default), 10min, EOD).

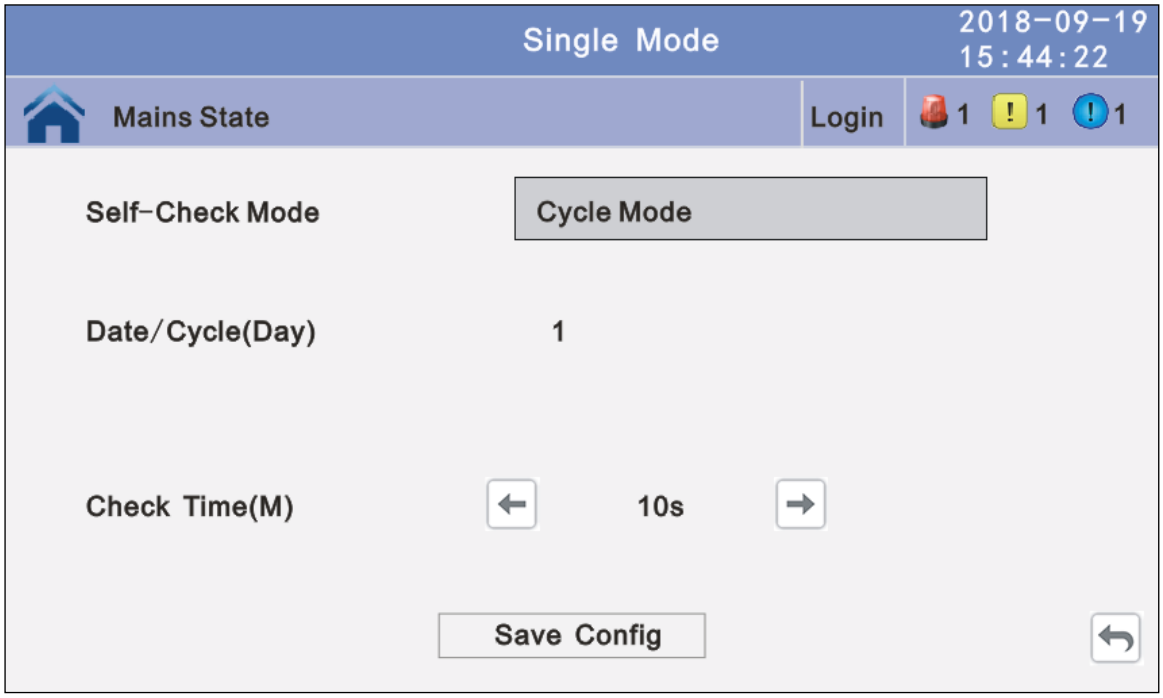

4.3.6 Common: INV ON/OFF, Battery test and Fault clear.

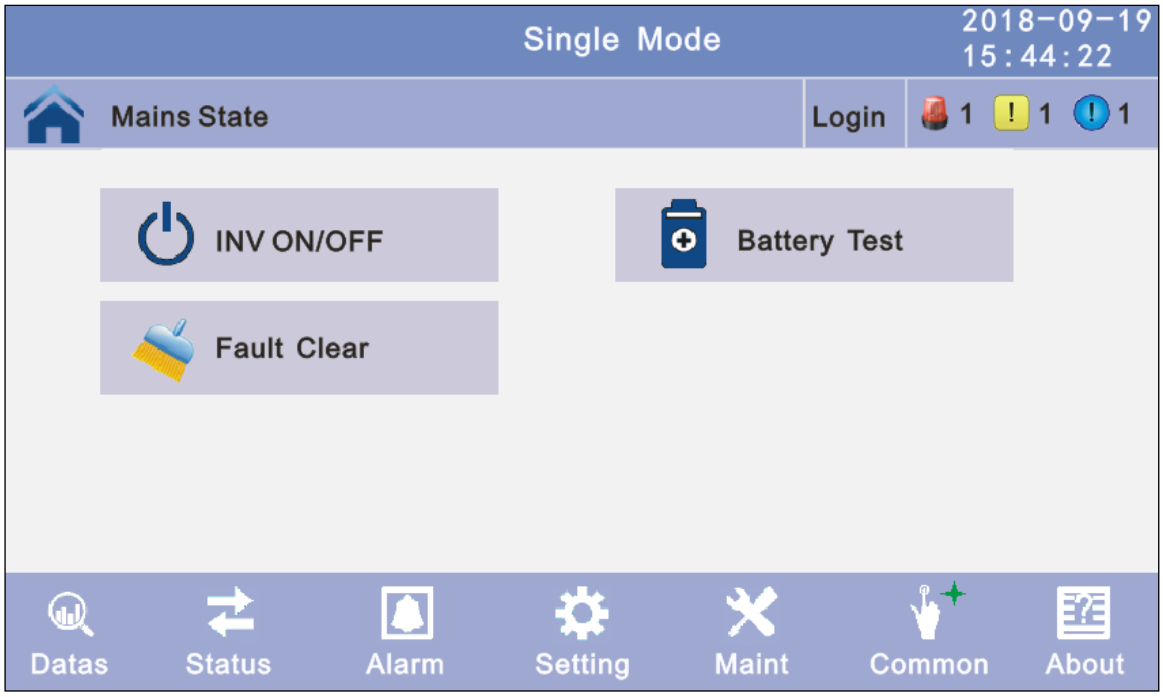

4.3.6.1 INV ON/OFF

Single OFF: Inverter OFF location UPS

Single ON: Inverter ON location UPS

Parallel OFF: Inverter OFF all parallel UPSs

Parallel ON: Inverter ON all parallel UPSs

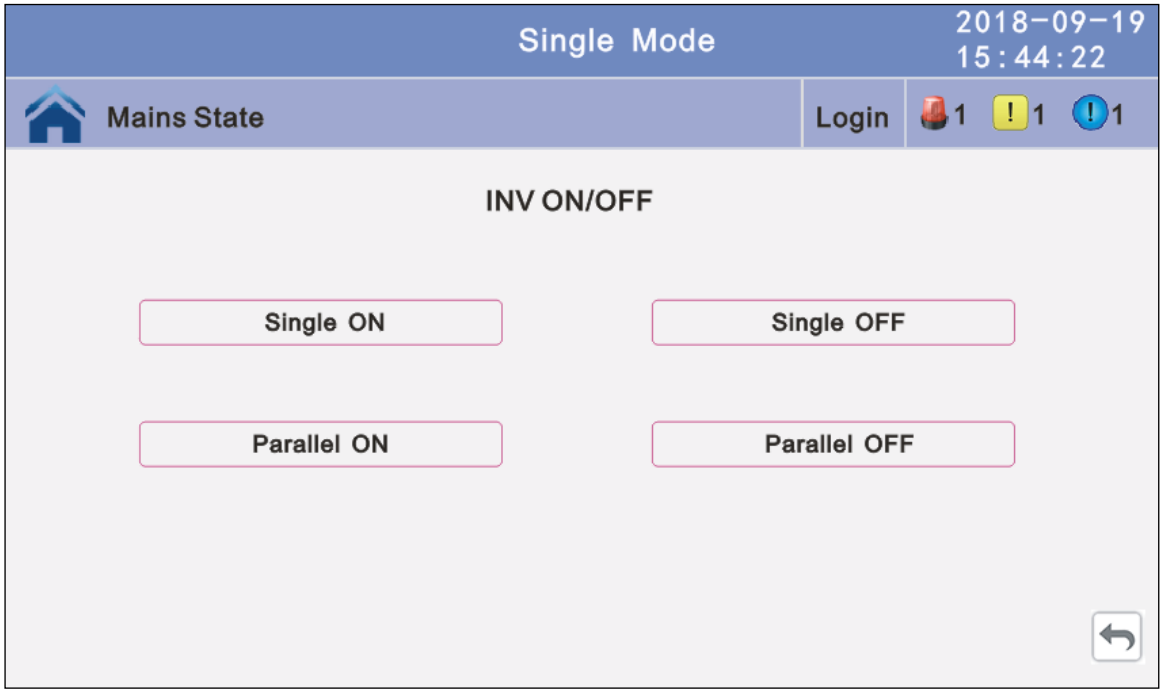

4.3.6.2 Battery Test

10S: battery test for 10s

10min: battery test for 10min

EOD: battery test to EOD

-10%: battery test down 10% capability.

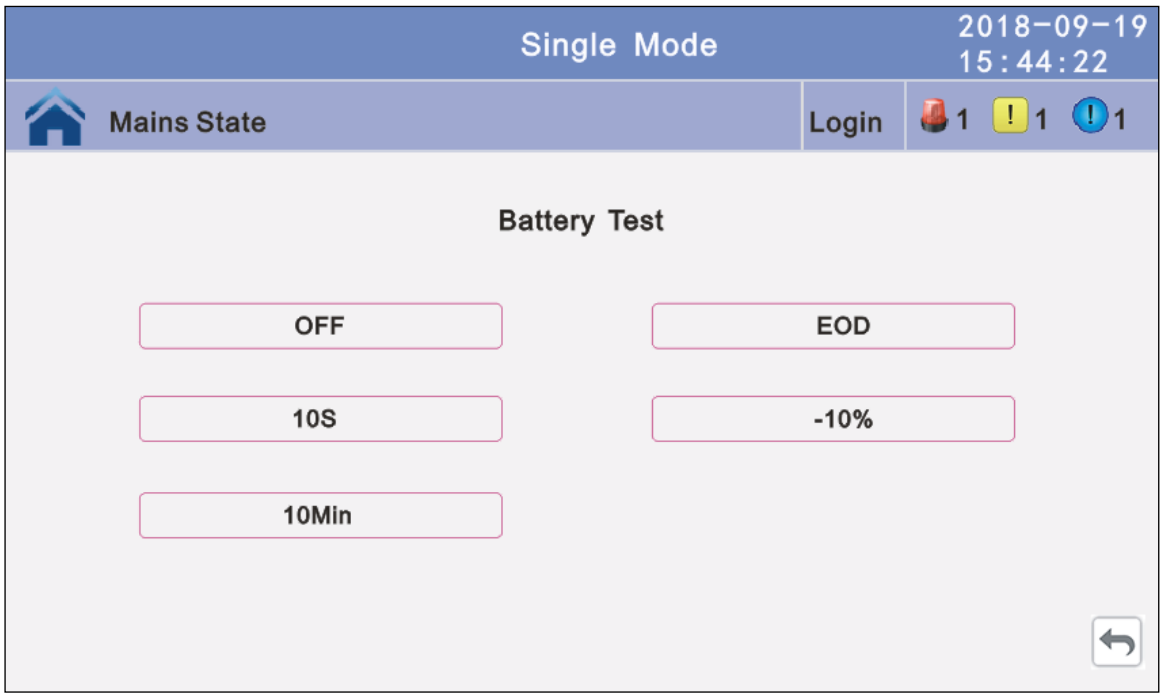

4.3.6.3 Fault clear: Clear the current fault (not for all faults).

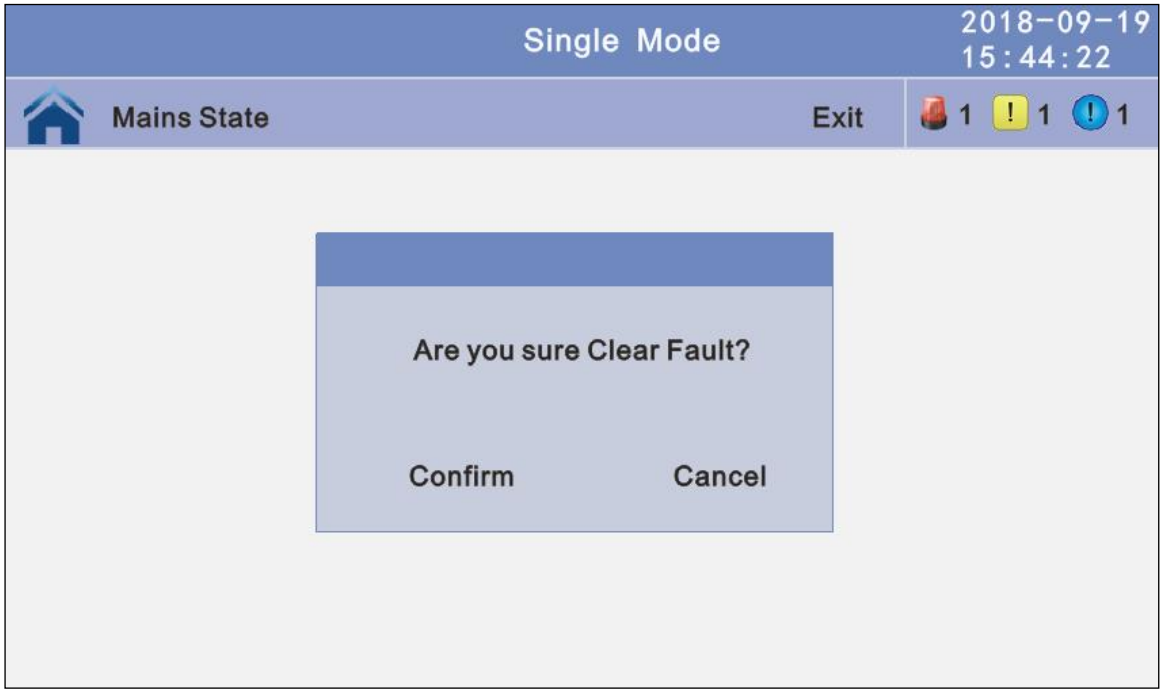

4.3.7 About: check the software version

4.3.7.1 Monitor and LCD software version

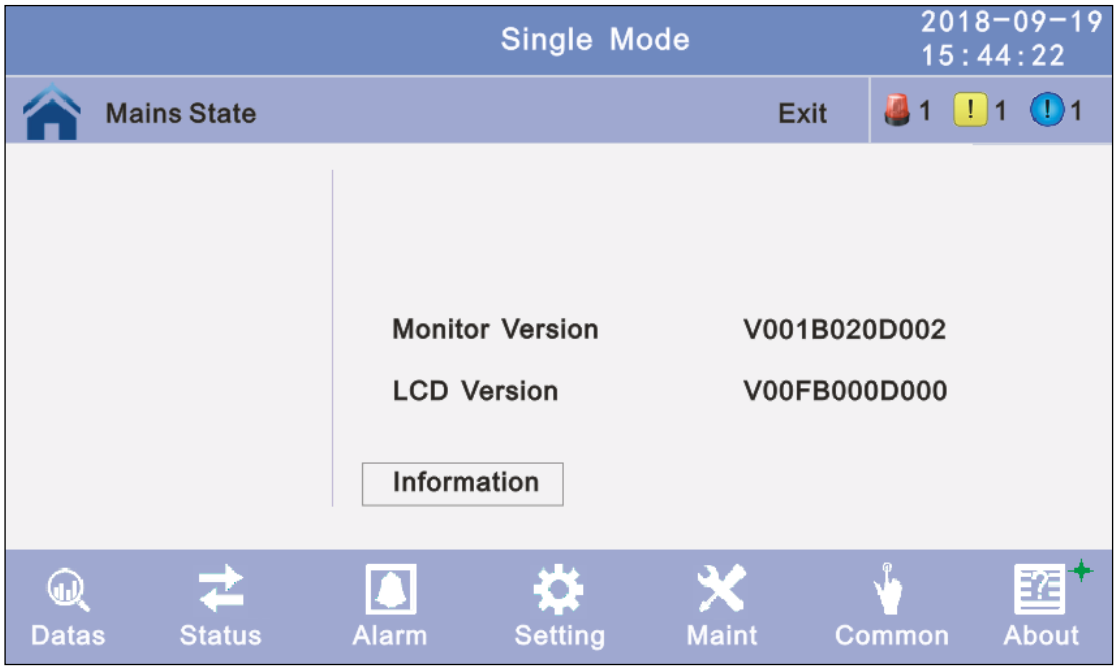

4.4 Display Messages/Troubleshooting

This section lists the event and alarm messages that the UPS might display. The messages are listed in alphabetical order. This section is listed with each alarm message to help you troubleshoot problems.

Display messages

Operational Status and Mode(s)

No.	Information stand for	LED			
		Fault	Bypass	Battery	Inverter
1	Initialized	**EXTINGUISH**	**EXTINGUISH**	**EXTINGUISH**	**EXTINGUISH**
2	Standby Mode	**EXTINGUISH**	**EXTINGUISH**	X	**EXTINGUISH**
3	No Output	**EXTINGUISH**	**EXTINGUISH**	X	**EXTINGUISH**
4	Bypass Mode	**EXTINGUISH**	**LIGHT**	X	**EXTINGUISH**
5	Utility Mode	**EXTINGUISH**	**EXTINGUISH**	X	**LIGHT**
6	Battery Mode	**EXTINGUISH**	**EXTINGUISH**	**LIGHT**	**EXTINGUISH**
7	Battery Self-diagnostics	**EXTINGUISH**	**EXTINGUISH**	**LIGHT**	**EXTINGUISH**
8	Inverter is starting up	**EXTINGUISH**	X	X	**EXTINGUISH**
9	ECO Mode	**EXTINGUISH**	X	X	X
10	EPO Mode	**LIGHT**	**EXTINGUISH**	X	**EXTINGUISH**
11	Maintenance Bypass Mode	**EXTINGUISH**	**EXTINGUISH**	**EXTINGUISH**	**EXTINGUISH**
12	Fault Mode	**LIGHT**	X	X	X

CAUTION : "X" means it is determined by other conditions

Fault messages

No.	Code	Fault	Buzzer	Fault LED	Alarm LED
1	002	REC Over Temperature	Twice per second	Light	
2	003	REC Par. Cable Fault	Twice per second	Light	
3	004	REC Over Curr	Once per second	Light	
4	005	REC Power Fault	Beep continuously	Light	
5	007	Input SCR Fault	Beep continuously	Light	
6	00A	DisChage SCR Fault	Beep continuously	Light	
7	00C	Charge SCR Fault	Beep continuously	Light	
8	00E	Fan Fault	Beep continuously	Light	
9	012	Charger Over Temp.	Beep continuously	Light	
10	013	Soft Start Failed	Beep continuously	Light	
11	014	BAT Charger Fault	Beep continuously	Light	
12	016	REC Comm. Fault	Once per 2 seconds	Light	
13	019	REC Initializes Fault	Twice per second	Light	
14	01D	Unit Connected fault	Once per 2 seconds	Light	
15	01E	Rectifier Fault	Beep continuously	Light	
16	041	Inverter Fault	Beep continuously	Light	
17	044	INV IGBT SHORT	Beep continuously	Light	
18	047	Inverter Relay Short	Beep continuously	Light	
19	04A	Inverter Relay Broken	Beep continuously	Light	
20	04D	INV Par.cable Fault	Twice per second	Light	
21	051	Output Short Circuit	Once per second	Light	
22	054	INV Comm. Fault	Once per 2 seconds	Light	
23	057	INV Initializes Fault	Beep continuously	Light	
24	05A	INV Self-test Fault	Beep continuously	Light	
25	05E	DC Component Fault	Once per 2 seconds	Light	
26	061	DC Bus abnormal	Beep continuously	Light	
27	063	Unit Insert Fault	Once per 2 seconds	Light	
28	064	INV Power Fault	Beep continuously	Light	
29	067	INV Over Temperature	Twice per second	Light	
30	068	Load Sharing Fault	Twice per second	Light	
31	06A	Rack Mode Fault	Beep continuously	Light	
32	06B	Fuse Broken	Beep continuously	Light	
33	081	Par. Cable Fault	Twice per second	Light	
34	086	ECU Insert Fault	Once per 2 seconds	Light	
35	088	ECU Power Fault	Beep continuously	Light	
36	08B	ECU Comm. Fault	Once per 2 seconds	Light	

37	08D	ECU Initializes Fault	Beep continuously	Light	
38	091	BYP SCR Broken	Beep continuously	Light	
39	094	BYP SCR Short	Beep continuously	Light	
40	097	BYP Over Temperature	Beep continuously	Light	
41	09A	Output CT Reversed	Beep continuously	Light	
42	103	BATT Over Volt	Once per second		Light
55	104	BATT Low Pre-warning	Once per second		Light
56	105	BATT Reversed	Twice per second		Light
57	106	BATT EOD	Once per second		Light
58	107	BATT Low Volt	Once per second		Light
59	108	No BATT	Once per second		Light
60	109	Input Phase Reversed	Once per second		Light
61	10A	Input N-Line Lost	Twice per second		Light
62	10B	Mains Freq. Abnormal	Once per 2 seconds		Light
63	10C	Mains Volt. Abnormal	Once per 2 seconds		Light
64	10D	REC Comm. Error	Once per 2 seconds		Light
65	10E	No Mains	Once per 2 seconds		Light
66	10F	REC Set Data Error	Once per 2 seconds		Light
67	121	INV Par. Cable Abnormal	Once per 2 seconds		Light
68	125	Inverter Overload	Once per second		Light
69	126	INV Not Synchronized	Beep continuously		Light
70	129	INV Comm. Error	Once per 2 seconds		Light
71	12A	INV Set Data Error	Once per 2 seconds		Light
72	141	BYP Change to Num	Once per 2 seconds		Light
73	142	PM Quantity Mismatch	Once per 2 seconds		Light
74	143	Parallel Overload	Once per 2 seconds		Light
75	144	BYP Overload	Once per 2 seconds		Light
76	145	Maint. Switch Misuse	Once per 2 seconds		Light
77	146	ECU Comm. Error	Once per 2 seconds		Light
78	147	Rack Par. Cable Abnormal	Once per 2 seconds		Light
79	14B	ECU Par. Cable Abnormal	Once per 2 seconds		Light
80	14C	ECU Abnormal	Once per 2 seconds		Light
81	14E	BYP Phase Reverse	Once per second		Light
82	14F	BYP Unable To Trace	Once per 2 seconds		Light
83	150	BYP Not Available	Once per 2 seconds		Light
84	151	ECU Set Data Error	Once per 2 seconds		Light
85	152	LBS Signal Error	Once per 2 seconds		Light
86	153	Parallel Link Error	Once per 2 seconds		Light
87	181	BATT Fault	Once per 2 seconds		Light

95	183	BATT Over Volt	Once per 2 seconds		Light
96	188	System Need maintenance!	Once per 2 seconds		Light
97	189	BATT Switch OFF	Once per 2 seconds		Light
98	18A	Eeprom Error	Once per 2 seconds		Light
101	18B	RS485 Sensor Not Connected	Once per 2 seconds		Light

Event messages

No.	Code	Event	No.	Code	Event
1	001	Initializing	33	027	BYP SW Close
2	002	To Standby	34	028	BYP SW Open
3	003	Non-Output	35	029	Output SW Close
4	004	On Bypass	36	02A	Output SW Open
5	005	On Line	37	02B	Dry. Maint. SW Close
6	006	Discharged BATT	38	02C	Dry. Maint. SW Open
7	007	ECO Activated	39	02D	Dry. BATT SW Close
8	008	Automatic Self-Test	40	02E	Dry. BATT SW Open
9	009	Inv In Soft Starting	41	033	INV.Invalid Due To Overload
10	00A	System Fault Detected	42	034	ECU Work
11	00B	Maint. BYP Mode	43	035	LBS Activated
12	00C	EPO Activated	44	036	Transfer Times-out
13	00D	Joint Power Supply	45	039	Batt. Trip Activated
14	00E	Enter Self-Aging Mode	46	03A	Batt. Trip Stop
15	015	REC EPO Mode	47	03C	Unit Online
16	016	REC Curr Limt	48	03D	Unit Offline
17	017	REC Activated	49	040	Dry. BATT Trip Activated
18	018	REC Deactivated	50	041	Dry. BYP Feedback
19	019	P-Batt Boost Charging	51	042	REC EPO Clear
20	01A	P-Batt Float Charging	52	043	REC Curr Limt Clear
21	01B	N-Batt Boost Charging	53	044	REC Mains Input
22	01C	N-Batt Float Charging	54	045	REC BATT Input
23	01D	BATT Testing	55	046	End of BATT Self-Test
24	01E	Inverter Work	56	047	Inverter Standby
25	01F	Enter Sleep Mode	57	048	Inverter Self-Aging
26	020	Shutdown Due To Overload	58	04A	Inverter EPO Cancel
27	021	On Bypass Due To Overload	59	04B	Startup capacity is normal
28	022	INV EPO Mode	60	04C	ECU Off
29	023	Maint. SW Close	61	04D	ECU Standby
30	024	Maint. SW Open	62	056	Enter cabinet sleep mode

31	025	Input SW Close	63	057	Exit cabinet sleep mode
32	026	Input SW Open			

4.5 Options

SNMP card

- Loosen the 2 torque screws (on each side of the card).
- Carefully pull out the card. Reverse the procedure for re-installation

Functions

- Support multiple operating systems (Windows、Mac、Linux)
- UPS can be monitored remotely through the network;
- Can realize web-based user interface;
- Support e-mail alarm;
- Multi-user permission management;
- Support DHCP;
- Support remote self-testing, shutdown and restart UPS functions (UPS support required);
- Support telnet, SSH, Web page configuration;
- Support scheduled tasks (timed self-test, power on/off);
- Historical events and historical data storage functions;
- Remote UPS monitoring and management can be performed through HTTP, SNMP, SSH, Telnet;
- Complete equipment event handling (including event recording and notification);
- Can be extended to connect 2 channels of temperature and humidity monitoring modules;

Features

- Networking methods: IP-based LAN, WAN, Internet, wireless Ethernet, etc.;
- User permission management, safe, confidential and reliable;
- Support multiple configuration management methods such as Telnet, SSH, Web;
- Support scheduled task function, allow setting scheduled UPS on/off, scheduled battery discharge, etc.
- Support storage of 50, 000 historical data and 5, 000 historical event records;
- Built-in ultra-long-life system clock, support automatic timing to achieve time synchronization;

- Support SNMP V1/V2/V3, HTTP, DHCP, SSH, SSL and other network protocols;
- Support IPV6;
- Support the expansion of 2-channel ambient temperature and humidity monitoring modules;
- Support e-mail alarm function;

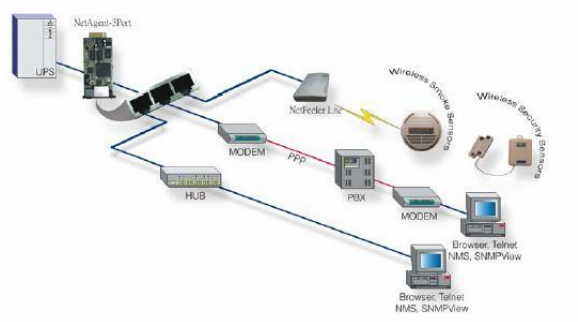

Typical topology of the UPS Network Management

Relay card

A 10-pin terminal is supported to offer the signals of Bypass, Utility Failure, Inverter On, Battery Low, UPS fault, UPS Alarm, and UPS Shutdown.

The relay communication card contains six dry contact outputs and one dry input. The inputs and outputs are factory programmed according to functions listed in the table

Table: Relay Contacts (communication card)

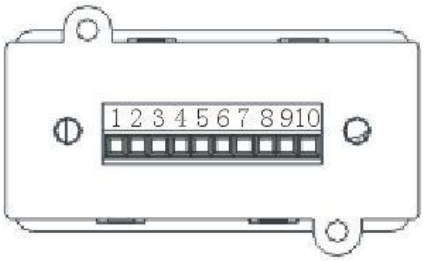

Port		Function
1	Output	Utility Failure
2		/
3		Battery Low
4		On Bypass
5		UPS Fault
6		Inverter On
7		UPS Alarm
8		COM
9	Input	ON
10		OFF

CAUTION!

The output contacts numbers for a second relay board installed will be 1 to 7.

Contacts are NO (normally open) type.

Appendix 1 Specifications

MODEL		50kVA	60kVA	80kVA	100kVA	120kVA
Capacity (VA/Watts)		50k / 50k	60k / 60k	80k / 80k	100k / 100k	120k / 120k
INPUT						
Nominal voltage		380/400/415Vac, (3Ph+N+PE)				
Operating voltage range		138~485Vac				
Operating frequency range		40Hz-70Hz				
Power factor		≥0.99				
Harmonic distortion (THDi)		≤3% (100%non-linear load)				
Bypass voltage range		220Vac Max.voltage: +25%(optional +10%,+15%,+20%) 230Vac Max.voltage: +20%(optional +10%,+15%) 240Vac Max.voltage: +15%(optional +10%) Min. voltage: -45% (optional -10%, -15%, -20%,-30%)				
Frequency synchronize tracing range		±10%				
Generator input		Support				
OUTPUT						
Output voltage		380/400/415Vac (3Ph+N+PE)				
Voltage regulation		±1%				
Power factor		1.0				
Output frequency		1.Line Mode: synchronize with input; when input frequency > ±10% (±1%/±2%/±4%/±5% optional) 2.Battery Mode:50/60*(1±0.02%)Hz				
Crest factor		3:1				
Harmonic distortion (THD)		≤2% with linear load ≤4% with non linear load				
Efficiency		95.5%				
BATTERY						
Battery voltage	External	Optional Voltage: ±180V/192V/±204V/±216V/±228V/±240/±252/±264/±276/±288/±300Vdc(30/32/34/36/38/40/42/44/46/48/50pcs optional); 360Vdc~600Vdc (30~50 pcs, 30 pcs define, 36 ~ 50 pcs no power derating; 32~34 pcs output power factor 0.9; 30 pcs output power factor 0.8;)				
	Build-in	6 group 20 pcs 7/9Ah batteries			10 group 20 pcs 7/9Ah batteries	

Charge Current(A) (charge current can be set according to battery capacity installed)	External	20A Max.	40A Max.	
	Build-in	4A Max.		6.8A Max.
SYSTEM FEATURES				
Transfer time		Utility to Battery : 0ms; Utility to bypass: 0ms		
Overload		Load≤110%: last 60min,≤125%: last 10min,≤150%: last 1min		
Alarm		overload, utility abnormal, UPS fault, battery low, etc.		
Backfeed		Support		
Protection		short circuit, overload, over temperature, battery low, fan fault alarm.		
Communication		USB,RS232, RS485, Parallel port, REPO port, LBS port, Backfeed port, Intelligent slot, SNMP card (optional), Relay card (optional)		
ENVIRONMENTAL				
Operating temperature		0℃ ~ 40℃		
Storage temperature		-25℃ ~ 55℃(no battery)		
Humidity range		0 ~ 95% (non condensing)		
Altitude		< 1500m.When>1500m,lower the rated power for use		
Noise level		<60dB	<62dB	<65dB
PHYSICAL				
Dimension D×W×H (mm)		850x600x1200		1000x600x1600
STANDARDS				
Safety		IEC/EN62040-1,IEC/EN60950-1		
EMC		IEC/EN62040-3,IEC61000-4-2,IEC61000-4-3,IEC61000-4-4,IEC61000-4-5,IEC61000-4-6,IEC61000-4-8		

*Rated voltage: 380/400/415Vac

Appendix 2 Problems and Solution

In case the UPS cannot work normally, it might be wrong in installation, wiring or operation. Please check these aspects first. If all these aspects are checked without any problem, please consult with local agent right away and provide below information.

（1）Product model name and serial number.

（2）Try to describe the fault with more details, such as LCD display info, LED lights status, etc.

Read the user manual carefully, it can help a lot for using this UPS in the right way. Some FAQ (frequently asked questions) may help you to troubleshoot your problem easily.

No.	Problem	Possible reason	Solution
1	Utility is connected but the UPS cannot be powered ON.	Input power supply is not connected; Input voltage low; The input switch of the UPS is not switched on.	Measure if the UPS input voltage/frequency is within the window. Check if UPS input is switched on
2	Utility normal but Utility LED does not light on, and the UPS operates at battery mode	The input breakers of the UPS are not switched on; input cable is not well connected	Switch on the input breaker; Make sure the input cable is well connected.
3	The UPS does not indicate any failure, but output do not have voltage	Output cable does not well connected; Output breaker do not switch on	Make sure the output cable is well connected; Switch on the output breaker.
4	Utility LED is flashing	Utility voltage exceeds UPS input range.	If the UPS operates at battery mode, please pay attention to the remaining backup time needed for your system.
5	Battery LED is flashing but no charge voltage and current	Battery breaker does not switch on, or batteries are damaged, or battery is reversely connected. Battery number and capacity are not set correctly.	Switch on the battery breaker. If batteries are damaged, need to replace whole group batteries, Connect the battery cables correctly; Go to LCD setting of the battery number and capacity, set the correct data.
6	Buzzer beeps every 2 seconds and LCD display “output overload”	Overload	Remove some load
7	The UPS only works on bypass mode	The UPS is set to ECO mode, or the transfer times to bypass mode are limited.	Set the UPS working mode to UPS type(non-parallel) or to reset the times of transferring to bypass or re-start the UPS
8	Cannot Black start	Battery switch is not properly closed: Battery fuse is not open: Or Battery low: Battery quantity set wrong; Power breaker in the rear panel not switch ON.	Close the battery switch: Change the fuse: Recharge the battery: Power ON the UPS with AC to set the battery quantity &quantity; Switch on the power breaker.

Appendix 3 USB communication port definition

Definition of port :

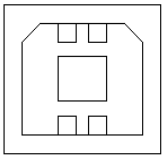

Connection between PC USB port and UPS USB port.

PC USB port	UPS USB port	Description
Pin 1	Pin 1	PC : +5V
Pin 2	Pin 2	PC : DPLUS signal
Pin 3	Pin 3	PC :DMINUS signal
Pin 4	Pin 4	Signal ground

Available function of USB

- Monitor UPS power status.
- Monitor UPS alarm info.
- Monitor UPS running parameters.
- Timing off/on setting.

Communication data format

Baud rate ---------- 9600bps

Byte length ---------- 8bit

End bit ---------- 1bit

Parity check ---------none

CAUTION!

USB and RS232 interface cannot be used at the same time, you can only use one of them at one time.

Appendix 4 RS232 communication port definition

Definition of Male port :

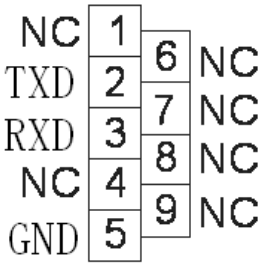

Connection between PC RS232 port and UPS RS232 port

PC RS232 port	UPS RS232 port	
Pin 2	Pin 2	UPS send,PC receive
Pin 3	Pin 3	PC send,UPS receive
Pin 5	Pin 5	ground

Available function of RS232

- Monitor UPS power status.
- Monitor UPS alarm info.
- Monitor UPS running parameters.
- Timing off/on setting.

RS-232 communication data format

Baud rate ---------- 9600bps

Byte length ---------- 8bit

End bit ---------- 1bit

Parity check ---------none

CAUTION!

USB and RS232 interface cannot be used at the same time, you can only use one of them at one time.

Appendix 5 RS485 communication port definition

Definition of port :

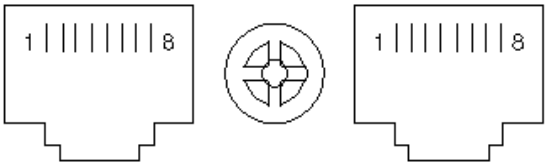

Connection between the Device's RS485 port and UPS RS485 port.

device(RJ45)	UPS(RJ45)	Description
Pin 1/5	Pin 1/5	485+ "A"
Pin 2/4	Pin 2/4	485 - "B"
Pin7	Pin7	+12Vdc
Pin8	Pin8	GND

Available function of RS485

- Monitor UPS power status.
- Monitor UPS alarm info.
- Monitor UPS running parameters.
- Timing off/on setting.
- Battery environment temperature monitoring.
- Charging voltage modulation depending on batteries temperature

Communication data format

Baud rate ---------- 9600bps

Byte length ---------- 8bit

End bit ---------- 1bit

Parity check ---------none

CAUTION!

RS485 port pin7 is 12Vdc!

Appendix 6 Optional port definition

Definition of Male port :

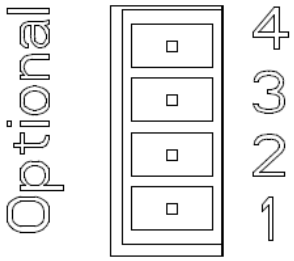

Instruction:

UPS	Instruction
Pin1	Normally NC (+24Vdc)
Pin2	Normally NO
Pin3	/
Pin4	GND

- Function 1 description (Optional, by default, monitor board jumper J21:2-3 pin is short circuit): Drive the bypass breaker when feedback alarm.
- Function 2 description (Optional, change the monitor board jumper J21:1-2 pin to short circuit): Drive the battery breaker when battery voltage low.

Appendix 7 REPO instruction

Definition of port :

Connection diagram :

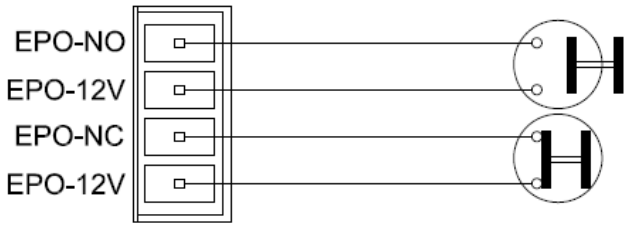

Connection between the button and UPS REPO port.

Button	UPS REPO	Description
Pin 1	Pin 1	EPO-NO
Pin 2	Pin 2	EPO-12V
Pin 1	Pin 3	EPO-NC
Pin 2	Pin 4	EPO-12V

◆A remote emergency stop switch can be installed in a remote location and connection through simple wires to the REPO connector.

Appendix 8 Backfeed Protection

Backfeed Protection

The presence of a backfeed protection is required by IEC 62040-1 UPS standard.
An additional external isolation device must be installed upstream the UPS system. A magnetic contactor or a circuit breaker with UVR (Under Voltage Release) functionality can be used for this purpose.
The isolation device must be able to carry the UPS input current (common input in case of single source, bypass input in case of dual source).
E.g. an isolation device can be a magnetic contactor. The coil of the contactor should be supplied by (eg. fused L1-N voltage) the input source in single mains configurations or by the bypass source in dual mains configurations, via the output port as per Appendix 6.
If the contactor coil exceeds the voltage/current limits of the UPS output port a 24 Vcc source should be generated from the same source the contactor coil is supplied from, in order to supply an additional external auxiliary relay coil. The relay contact, properly rated, should allow to supply the contactor coil.

Backfeed installation with relay:

1. Connect the terminal of the relay R coil to the UPS backfeed dry contact port (Normally closed).
2. Connect the fuse F, the auxiliary contact of relay R, and the coil of C as shown in the illustration below.
3. Connect C (L1, L2 , L3) with UPS output (L1, L2, L3) as shown in the illustration below.
4. Connect bypass input (N) with mains feeding (N) in the distribution.

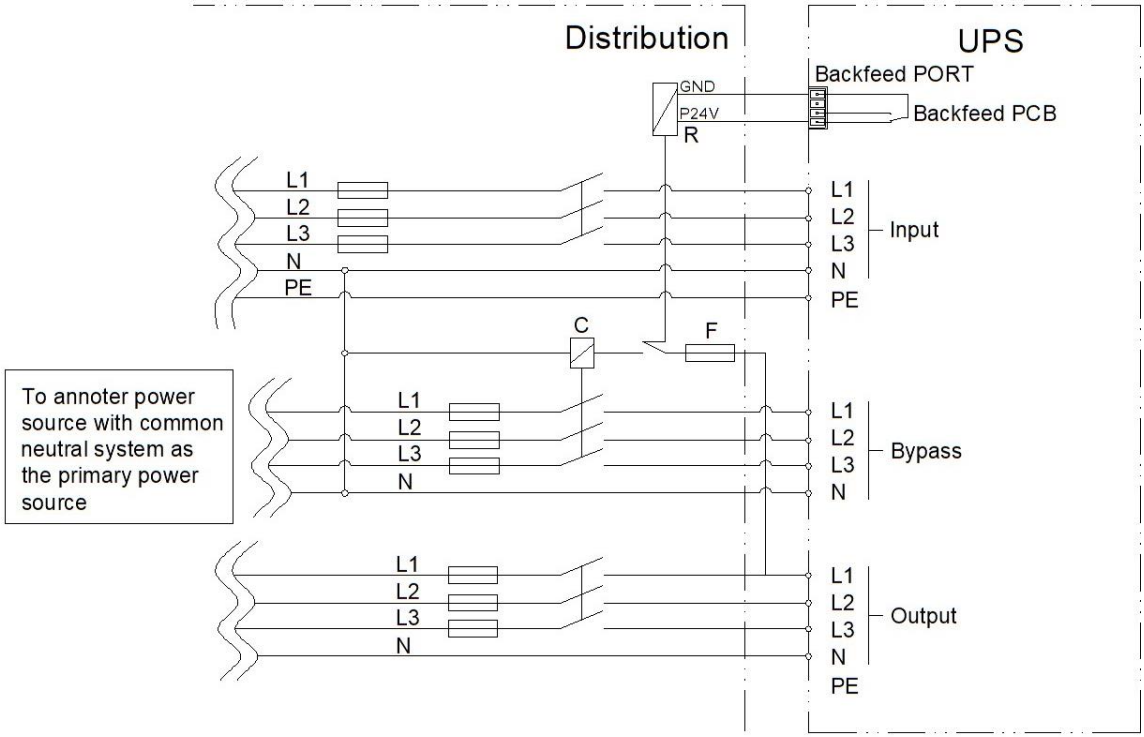

Backfeed installation without relay:

1. Connect the UPS backfeed dry contact port 1 to F. Route the cable with the other signal cables.
2. Connect the UPS backfeed dry contact port 4 to the contactor C coil. Route the cable with the other signal cables (Normally closed).
3. Connect the fuse F and the coil of C as shown in the illustration below.
4. Connect C (L1, L2 , L3) with UPS output (L1, L2, L3) as shown in the illustration below.
5. Connect bypass input (N) with mains feeding (N) in the distribution.
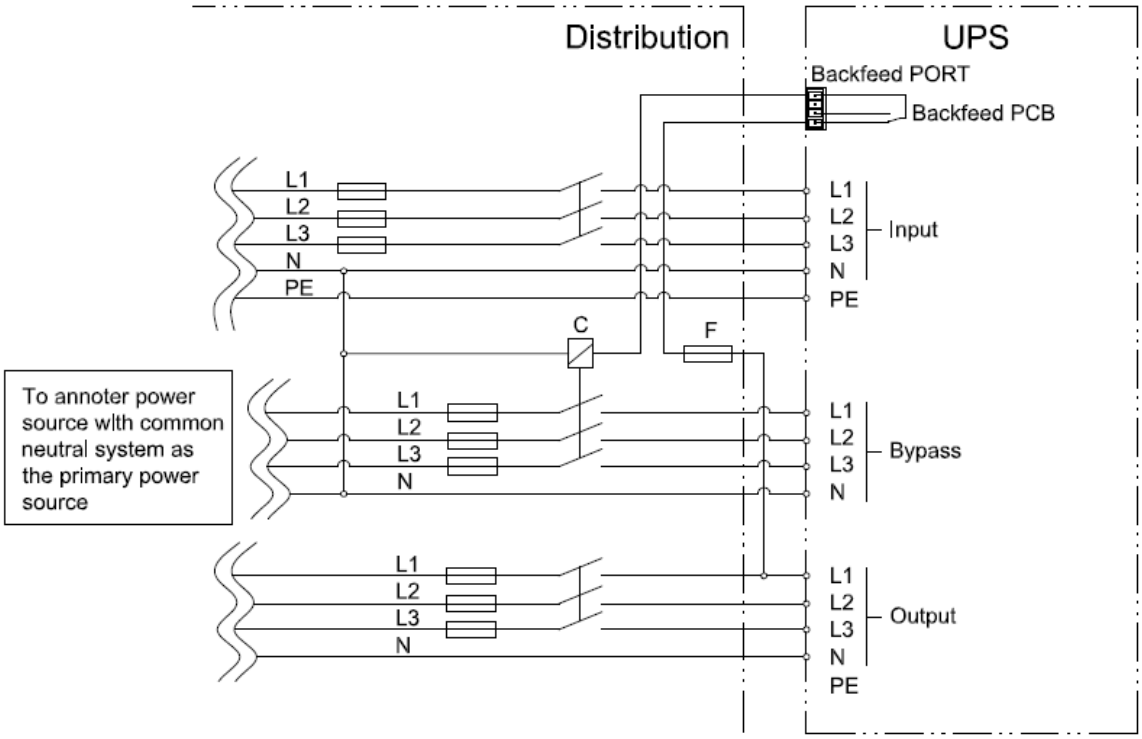
Note: Must disconnect the cable of monitor that connect J24 to J25 and put the jumper to short the pin1 to pin2 of J25